NAIMA

FIBROUS GLASS DUCT CONSTRUCTION STANDARDS

NAIMA
NORTH AMERICAN INSULATION MANUFACTURERS ASSOCIATION

FIBROUS GLASS DUCT CONSTRUCTION STANDARDS

FIFTH EDITION

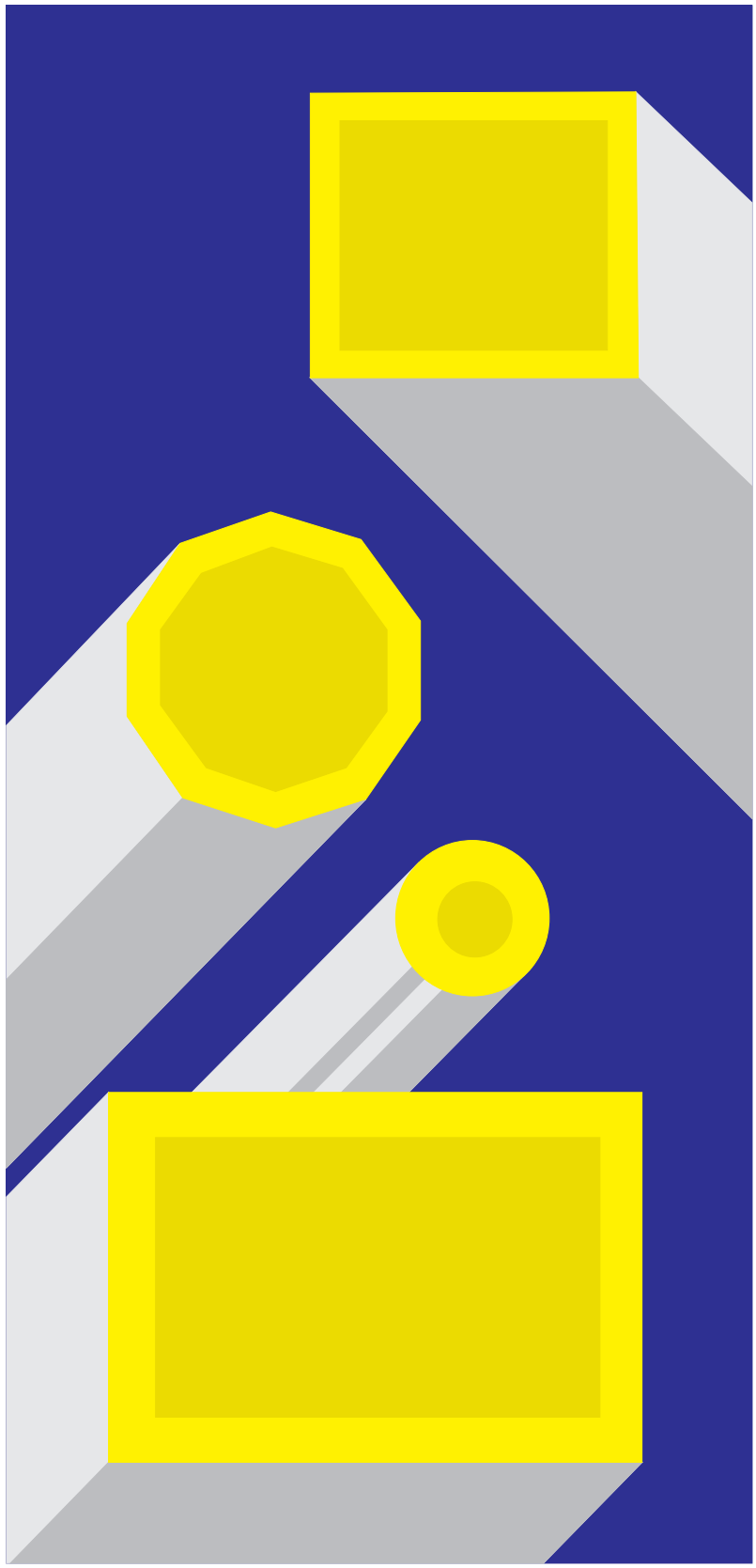

INSULATE TODAY
SAVE TOMORROW

LOW VELOCITY SYSTEMS
2" W.G. (500Pa) MAXIMUM
STATIC PRESSURE

COPYRIGHT© 2002, NAIMA, ALL RIGHTS RESERVED

$20.00

NAIMA
NORTH AMERICAN INSULATION MANUFACTURERS ASSOCIATION

FIBROUS GLASS DUCT CONSTRUCTION STANDARDS

LOW VELOCITY SYSTEMS
2" w.g. (500 Pa) Maximum Static Pressure

FIFTH EDITION, 2002

PREFACE

The North American Insulation Manufacturers Association (NAIMA) presents this Standard as a recommended method of fabricating and installing air transmission ducts in buildings using fibrous glass material as specified herein.

Rectangular ducts covered by this Standard are designed to operate at 2" w.g. (500 Pa) static pressure or less and 6,000 feet per minute (30.5 m/sec) internal air velocity or less. Other duct configurations have been qualified for higher pressures and/or velocities.

Underwriters Laboratories Inc. Standard for Closure Systems For Use With Rigid Air Ducts and Air Connectors UL 181A incorporates key provisions of the UL 181 Standard, as well as additional provisions developed by NAIMA and various closure material manufacturers. The resultant standard provides the means for assuring the contractor and building owner that the selected closure system will, when properly applied, perform within varied environmental conditions.

NAIMA acknowledges SMACNA's Fibrous Glass Duct Construction Standards, as a basis for the scope and content of the present document.

This Standard was developed using reliable engineering principles and research, plus consultation with and information obtained from manufacturers, contractors, testing laboratories, and others having specialized experience. They are subject to revision as further experience and investigation may show is necessary or desirable. Construction methods and products which comply with this Standard will not necessarily be acceptable if, when examined and tested, they are found to have other features which impair the result intended by these requirements.

Dimensional data on 2" (51mm) thick fibrous glass duct board, with an R-value of 8.7 (RSI of 1.53), not having been widely used until recently, was not provided in previous editions of this Standard, including the Fourth Edition (2001). This revised Fourth Edition includes thermal, acoustical, and dimensional data for 2" (51mm) duct board. For more complete dimensional details, refer to supplement, Pub. No. AH-136. The North American Insulation Manufacturers Association assumes no responsibility and accepts no liability for the application of the principles or techniques contained in this Standard. **In particular, NAIMA makes no warranty of any kind, express or implied or regarding merchantability or fitness for any particular purpose, in connection with the information supplied herein.**

Authorities considering adoption of this Standard should review all Federal, state, local and contractual regulations applicable to specific installations.

This Standard is not intended to preclude alternate methods and materials of fabrication, closure, reinforcement and support, when such methods and materials can be documented as providing equivalent performance.

The North American Insulation Manufacturers Association extends its thanks to the member companies of its Air Handling Technical Subcommittee who have contributed their time and talents in the development of this Standard.

NAIMA Air Handling Member Companies:

CertainTeed Corporation 800-233-8990
750 East Swedesford Road
Valley Forge, PA 19482
www.certainteed.com

Johns Manville Corp. 800-654-3103
717 17th Street
Denver, CO 80202
www.jm.com

Knauf Insulation 800-825-4434
One Knauf Drive
Shelbyville, IN 46176
www.knaufinsulation.us

Owens Corning 800-GET-PINK
One Owens Corning Parkway
Toledo, OH 43659
www.owenscorning.com

CONTENTS

Preface ii
Contents ..... iii, iv, v

SECTION I. PERFORMANCE CRITERIA
General requirements of air ducts 1-2
Analysis and determination of requirements for fibrous glass ducts 1-2, 1-3
Reinforcement 1-3
UL Class 1 Air Duct Rating 1-5
Longitudinal seams, transverse joints 1-3
Duct support 1-4
Thermal performance 1-4
Acoustical performance 1-4
Leakage 1-4, 1-5
Characteristics and limitations, fibrous glass ducts 1-6, 1-7
Fibrous glass duct system installation check list 1-8, 1-9

SECTION II. FABRICATION OF STRAIGHT DUCT MODULES
Principles of modular duct construction 2-2
Fabrication logistics 2-3
Layout methods; hand fabrication methods 2-4
Hand grooving tools 2-5
Hand fabrication - Guide edge method 2-6, 2-7
Machine fabrication of straight duct modules 2-8
Typical machine grooving tools; machine fabrication 2-9
Fabrication dimensions, one piece duct 2-10
Fabrication dimensions, two piece U-style duct 2-11
Fabrication dimensions, two piece L-style duct 2-12
Fabrication dimensions, four piece duct 2-13
Stretch-out dimensions, 1" (25mm) duct board 2-14
Duct board utilization, 1" (25mm) duct board 2-15
Stretch-out dimensions, 1½" (38mm) duct board 2-16
Duct board utilization, 1½" (38mm) duct board 2-17
Stretch-out dimensions, 2" (51mm) duct board 2-18
Duct board utilization, 2" (51mm) duct board 2-19
Fabrication of duct module 2-20
Joining two duct modules 2-21

SECTION III. FABRICATION OF FITTINGS FROM MODULES OR FLAT BOARD
90° elbow with rail mounted metal turning vanes from module 3-2
90° elbow with turning vanes from flat duct board 3-3
Three piece 90° elbow from duct board module 3-4
Elbows of less than 90° from duct board module 3-5
Tee from duct board module with rail mounted turning vanes 3-6
Tee from flat duct board with fibrous glass turning vanes 3-7
One way 30° offset from duct board module 3-8
One way offset of any angle from duct board module 3-9
One way transition from duct board module, reducing square edge panel 3-10
One way transition from duct board module, reducing shiplapped panel 3-11
Two way transition from duct board module, reducing square edge and shiplap panels 3-12

One way transition from flat duct board, reducing shiplapped panel 3-13
Focal (centerline) transitions 3-14
Transition. Changing height, width from one piece of duct board 3-15
Transition. Changing height, width from four pieces of duct board 3-16
Branch take-off with adjustable splitter 3-17
Square and round taps 3-18
Wide mouth tap 3-19
Positive take-off 3-20
End caps 3-21
Volume damper installation 3-22
Fire damper installation 3-23
Flanged hot water heater installation 3-24
Slip-in equipment installation 3-25
Access door, flange on opening in duct 3-26
Access door, flange on door 3-27
Register and grill attachment 3-28
Diffuser drop connections 3-29
Connections to sheet metal 3-30
Fabrication with ten-sided fibrous glass duct 3-31
Board utilization, ten-sided duct 3-32
Stretch-out, ten-sided duct 3-33
Closure of ten-sided fibrous glass duct 3-34

SECTION IV. CLOSURE

Introduction; joint and seam preparation; surface preparation 4-2
Application of pressure sensitive aluminum foil tape closures 4-3
Application of heat activated aluminum foil tape closures 4-4
Closure machines using heat activated tape....4-4
Application of glass fabric and mastic closures 4-5
Flexible duct connections to fibrous glass duct board, closure strap method 4-6
Flexible duct connections to fibrous glass duct board, insulated collar method 4-7

SECTION V. REINFORCEMENT

Introduction; positive pressure reinforcement 5-2
Tie rod reinforcement schedule, positive pressure 5-3
Placement of tie rods in relation to shiplapped joints 5-4
Placement of tie rods in relation to butt joints 5-5
Typical tie rod reinforcement, positive pressure ducts 5-6
Tie rod termination methods 5-7
Channel reinforcement schedule 5-8
Channel reinforcement, positive pressure ducts 5-9
Typical channel reinforcement, positive pressure ducts 5-10
Negative pressure channel reinforcement 5-11
Typical channel reinforcement, negative pressure ducts 5-12
Partial wrap-around reinforcement 5-13
Reinforcement, 90° elbows, shiplap construction, cheek panels 5-14
Reinforcement, 90° elbows, shiplap construction, heel and throat panels 5-15
Branch connections: connection reinforcement 5-16
Branch connections: trunk duct reinforcement 5-17

Tees: cheek panel reinforcement 5-18
Tees: heel and throat panel reinforcement 5-19
Offsets: cheek panel reinforcement 5-20
Offsets: heel and throat panel reinforcement 5-21
Transitions: cheek and sloped panel reinforcement 5-22
Reinforcement of access doors 5-23
Reinforcement of end caps, shiplap construction 5-24

SECTION VI. HANGERS AND SUPPORTS

Introduction 6-2
Standard 3" (76mm) wide hangers 6-3
Maximum hanger spacing 6-4
Hanging fibrous glass duct fittings up to 48" (1219mm) in width 6-5, 6-6
Vertical riser support 6-7
Hanging ten sided and rigid round duct 6-8
Hanging and supporting flexible duct 6-9

SECTION VII. DAMAGE REPAIR

Repair of small facing or closure tears 7-2
Repair of major damage to one panel 7-3
Replacing entire shiplapped panel 7-4
Replacing entire square edge panel 7-5

APPENDIX

References A-2, A-3
Guide Specifications A-4, A-5, A-6
Map of DOE Climate Zones A-7
Energy Conservation Standard ASHRAE 90.1 ..... A-8
Energy Conservation Standard ASHRAE 90.2 ..... A-9
Health and Safety Issues, Work Practices A-10, A-11

NAIMA
North American Insulation Manufacturers Association

SECTION I

PERFORMANCE CRITERIA

SECTION I - PERFORMANCE CRITERIA

General Requirements of Air Ducts

A duct system is a structural assembly whose primary function is to convey air between specific points. In fulfilling this function, the duct assembly must perform satisfactorily with respect to certain fundamental performance characteristics. Elements of the assembly are duct material, reinforcement members, seams and joint treatments. With regard to the duct assembly and its elements, theoretical and/or practical limits must be established for:

- Dimensional stability, deformation and deflection.
- Containment of the air being conveyed.
- Exposure to damage, weather, temperature extremes, flexure cycles or other in-service conditions.
- Support.

In establishing limitations for these factors, consideration must be given to the effects of the pressure differential across the duct wall, air flow friction losses, air velocities, infiltration or exfiltration, as well as the inherent strength characteristics of the duct components. Construction methods which will permit an economical attainment of the predicted and desired performance must be determined.

Analysis and Determination of Requirements for Fibrous Glass Ducts

Fibrous glass duct systems are fabricated from three types of product:

1. Boards of resin bonded inorganic glass fibers 1", 11/2", or 2" (25mm, 38mm, or 51mm) thick, having a factory-applied reinforced aluminum foil/kraft laminate exterior air barrier finish, for fabricating rectangular and ten-sided ducts, plenums and distribution boxes. Regardless of thickness, the same reinforcement tables are applicable based on the flexural rigidity of the board, which includes consideration of the thickness.
2. Lengths of preformed rigid tubular fibrous glass duct of various diameters, with a reinforced aluminum exterior finish.
3. Lengths of round flexible duct, having a reinforced inner air barrier core, resilient fibrous glass insulation, and an outer vapor retarder jacket, cut to required lengths for ducts or run-outs from fibrous glass trunk ducts or plenums to grilles and diffusers.

General requirements for air ducts are as follows, except where differing procedures are part of a manufacturer's UL 181 listing and must be used in lieu of the procedures shown in this manual.

1. DUCT BOARD

1.1. Strength and Deflection

Board stiffness is defined by flexural rigidity, which is the product of Young's Modulus of Elasticity (E) and the moment of inertia (I) per unit width. Boards are identified by ratings of 475-EI, 800-EI, and 1400-EI, respectively. Flexural rigidity rating is determined in accordance with NAIMA Test Number AH-100 and is an average of specimens taken from sheets of duct board.

Duct board deflection relative to a flat position of the board is limited to one one-hundredth (1/100) of the span. This criterion is based on stress in the material not exceeding the proportional elastic limit of the material with suitable safety margins built in.

In both positive and negative pressure applications, the pressure differential causes additional board deflection. When it is necessary to limit this deflection, reinforcement shall be installed as defined in Section V of this Standard.

At atmospheric pressures, natural sag occurs in unsupported panels of duct board. Studies of natural sag and duct performance in larger duct sizes resulted in the determination that, when top panels of fibrous glass duct sections or fittings are 48" (1219mm) wide or greater, sag support must be provided by installing tie rod and conduit assemblies as shown on page 5-4 (at shiplapped joints) or page 5-5 (at butt joints); or by fastening top panels to channel reinforcement as shown on page 5-10.

1.2. Fatigue Tests

In normal service conditions, ducts incur pressure cycles. In investigating the potential effects of fatigue occurring in a duct system, sections of each duct board type (475-EI, 800-EI and 1400-EI) were cycled from atmospheric pressure to 150% of design pressure. Each test assembly consisted of not less than three 48" (1219mm) (nominal) long sections of fibrous glass duct. The tests were conducted at 3 to 4 cycles per minute for 50,000 cycles, after which samples were removed from the center of the duct and the board's flexural rigidity (EI) determined in accordance with NAIMA AH-100. For comparison of board strengths and deterioration, comparable samples of new duct board of each class were tested in accordance with the same NAIMA test method. In each case there was no significant reduction in the flexural rigidity of the cycled boards.

2. REINFORCEMENT

2.1. Strength and Deflection

After criteria for fibrous glass boards were established, reinforcement designs were calculated, fabricated, tested, and modified as necessary to restrain the board within the deflection limitation of one one-hundredth (1/100) of the span and to limit tensile stress in the steel reinforcement members to 22,000 psi (152 MPa).

2.2. Tests

Tests of reinforced ducts were made in systems incorporating both straight runs and fittings. Duct sizes ranging from 15" x 15" (381mm x 381mm) up to 96" x 42" (2438mm x 1067mm) were evaluated using dynamic and/or static testing. Maximum deflections generally occurred in the center of the board between reinforcements. Using boards of 475-EI, 800-EI, and 1400-EI, and selected transverse reinforcements, deflection measurements were recorded for positive or negative pressures after 50,000 cycles from zero to 150% of rated pressure.

2.3. Positioning

Duct analysis and determination of reinforcement sizes and spacing were based on the condition that reinforcement must be placed at transverse joints for optimum joint strength, and at intermediate points as required, in both positive and negative pressure applications. See pages 5-6, 5-10 and 5-12.

Moreover, on negative pressure systems with channel reinforcement, the general requirement to fasten reinforcement at distances not exceeding 16" (406mm) (approx.) is supplemented by a requirement to place 2" x 6" (51mm x 152mm nominal) 20 gauge retaining clips on the interior of the duct at circumferential joints as shown in the figures on pages 5-11 and 5-12.

3. LONGITUDINAL SEAMS, TRANSVERSE JOINTS

Recommended methods of forming and aligning duct sides are given in detail in this manual. In order to maintain alignment of the duct assembly, both longitudinal seams and transverse joints are sealed with a continuous closure system. Field observations and laboratory testing have indicated very low leakage rates.

Closures are an integral part of fibrous glass duct construction. Only those closures complying with UL 181A, Part I (P) for pressure sensitive aluminum foil tape, Part II (H) for heat activated aluminum foil tape, or Part III (M) for glass fabric and mastic, have been tested for compliance with all structural and safety requirements. See Section IV of this Standard for detailed closure application information.

4. DUCT SUPPORT

Hanger sizing and spacing for fibrous glass duct board systems are coordinated with other performance requirements of duct components. Hangers and supports must be placed for proper support of all duct board fittings and accessories so that taped joints are not placed under additional unanticipated stress.
See Section VI of this Standard.

Fibrous glass duct systems covered in this Standard are not designed to support human traffic or external loads.

5. THERMAL PERFORMANCE

At 75°F (24°C) mean temperature, fibrous glass duct board provides the following thermal performance values:

	1" (25mm)	1½" (38mm)	2" (51mm)
R value, hr ft² °F/Btu (m² °C/W)	4.3 (0.76)	6.5 (1.14)	8.7 (1.53)
k value, Btu in/hr ft² °F (W/m °C)	0.23 (0.033)	0.23 (0.033)	0.23 (0.033)
C value, Btu/hr ft² °F (W/m² °C)	0.23 (1.32)	0.16 (0.88)	0.12 (0.65)

Consult local codes for specific thermal requirements. Where codes do not address thermal value, NAIMA recommends using current ASHRAE minimum duct insulation requirements. See Appendix, Page A-7 and A-8.

6. ACOUSTICAL PERFORMANCE

Fibrous glass duct board absorbs fan and air turbulence noise and reduces the popping noises caused by expansion and contraction. Typical acoustical performance of fibrous glass duct board, measured in accordance with ASTM C 423 (mounting A), is as follows:

SOUND ABSORPTION COEFFICIENTS AT OCTAVE BAND CENTER FREQUENCIES, Hz

	125	250	500	1000	2000	4000	NRC
1.0" (25mm)	.03	.18	.61	.83	.89	.93	.65
1.5" (38mm)	.09	.33	.89	.96	.95	.94	.80
2.0" (51mm)	.17	.63	1.08	1.05	1.04	1.06	.95

A major benefit of the fibrous glass duct system is its contribution to a quiet indoor environment.

7. LEAKAGE

Ducts should be sufficiently airtight to ensure quiet, economical performance. Supply duct leakage reduces the delivered volumes of air at diffusers and registers, which must be compensated for by increasing the total quantity of supply air. Return duct leakage reduces system thermal efficiency and may draw unwanted air and contaminants into the system.

Air duct leakage testing was sponsored by ASHRAE, SMACNA and NAIMA. This test program, managed by ASHRAE, measured the leakage rates of typical duct constructions including fibrous glass ducts, sealed and unsealed rectangular metal ducts, round metal ducts, and flexible ducts. In addition to various duct materials and geometries, the testing also evaluated many of the connection methods and joint treatments typically used with these systems. The results from this extensive testing program were analyzed in an attempt to generate reliable leakage design data for each system type.

It was found that the leakage for each construction and joint treatment was related to the operating static pressure and the outside surface area of the duct system.
The form of this relationship was a power function:

$$F = C_L \times P^N, \text{ where}$$

F = leakage, cfm per 100 square feet of duct;
C_L = leakage coefficient or leakage class, dimensionless;
P = duct static pressure, inches w.g.
N = dimensionless rational number.

With minor variations, the ASHRAE testing found N to be 0.65 for all duct materials and constructions. The leakage coefficient C_L varied with material, construction and joint treatment. The results from fibrous glass duct were analyzed, and a classification was assigned based on the upper limits of the leakage measured for all of the duct board constructions. Reinforced fibrous glass duct board, tested up to 3" w.g. (750 Pa), was found to be a Class 6 system.

SMACNA has tabulated the leakage data to allow a designer to estimate the leakage per 100 square feet of duct outside surface area. The following chart summarizes this data. Again, fibrous glass duct systems are considered as Class C_L = 6 for purposes of this chart.

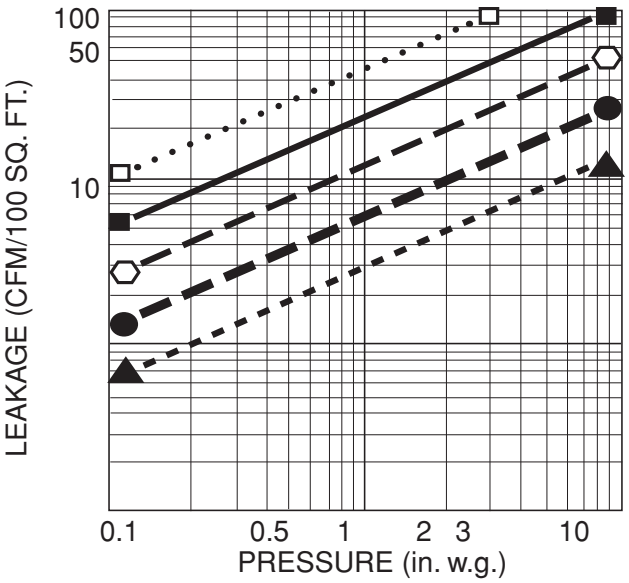

LEGEND:

□ C_L = 48 Unsealed rectangular sheet metal duct

■ C_L = 24
⬡ C_L = 12
● C_L = 6
} Sheet metal ducts with differing levels of joint and seam sealing
Reinforced rectangular fibrous glass duct board or rectangular sheet metal with all joints sealed

▲ C_L = 3 Non-reinforced fibrous glass duct, round or rectangular, or spiral sheet metal duct

8. UL 181 CLASS 1 AIR DUCT RATING

When ducts must conform to NFPA Standards 90A/90B and/or model codes, fibrous glass ducts are required to conform to the following requirements:

1. They shall be constructed of Class 1 duct materials as tested in accordance with Underwriters Laboratories Standard for Factory-Made Air Ducts and Air Connectors UL 181.
2. Such ducts shall be installed in accordance with the conditions of their listing.
3. They may not be used in air duct systems which operate with an air temperature higher than 250˚F (121˚C) entering the ducts.
4. They shall not be used as vertical risers in air duct systems serving more than two stories.

Under UL Standard 181 Class 1 air duct materials have a flame spread rating of 25 and a smoke developed rating of 50. The following portions of UL 181 are applicable to rigid fibrous glass ducts.

Surface burning characteristics
Flame penetration
Burning
Corrosion (metal parts not inherently corrosion resistant)
Mold growth and humidity
Temperature
Puncture
Static load
Impact
Erosion*
Pressure*
Collapse*
Leakage

*Erosion, pressure, and collapse tests are run at 2 1/2 times manufacturers' stated ratings. For the erosion test, the variable is velocity. For the pressure test, the variable is positive pressure. For the collapse test, the variable is negative pressure.

9. REFERENCE DATA

For product design and performance reference data, refer to manufacturers' data sheets.

COMPILATION OF FIBROUS GLASS DUCT CHARACTERISTICS AND LIMITATIONS

1. Flexural Rigidity
Average in the board, not less than rating of 475, 800, or 1400 pounds-inches^2 per inch of width when tested in accordance with NAIMA Test Method AH-100.

2. Static Pressure
Up to 2" w.g. (500 Pa), positive or negative in the duct.

3. Air Velocity
Rating of at least 2,400 feet per minute (12.0m/sec) in the duct.

4. Allowable Deflection
One one-hundredth of duct span maximum.

5. Maximum Allowable Stress in Steel Members Used for Reinforcement or Support
22,000 pounds per square inch (152 MPa).

6. Board Fatigue
No significant deformation or deficiency of duct sections after 50,000 cycles at 3 to 4 cycles per minute from natural sag to $1^1/_2$ times operating pressure.

7. Water Vapor Sorption
Water vapor sorption of the duct board shall not exceed 5% by weight under conditions of 120°F (49°C) dry bulb at 95% relative humidity for 96 hours' duration when tested in accordance with ASTM C 1104.

8. Temperature
- 40°F (4°C) minimum inside duct.
- 250°F (121°C) maximum inside duct.
- 150°F (66°C) maximum duct surface temperature.

9. Corrosiveness
Non-corrosive in contact with steel, copper, or aluminum when compared to control specimen in contact with clean sterile cotton when tested in accordance with ASTM C 665.

10. Closure
Closure materials (pressure sensitive tapes, heat activated tapes, glass fabric and mastic) shall conform to Underwriters Laboratories Standard UL 181A. When installed in accordance with manufacturers' instructions, closure systems will conform to UL 181 Class 1 Air Duct requirements.

11. Safety Standards
National Fire Protection Association Standards 90A/90B.

12. Bacteria and Fungal Growth Resistance
Fibrous glass duct products meet fungal and bacterial growth requirements when subjected to microbial attack as described in UL 181 and in ASTM C 1338 (no-growth procedure). Standard practices ASTM G 21 (fungus test) and G 22-95 (bacteria test) are also used to evaluate microbial growth.

13. Reinforcement Testing
Test programs have demonstrated that fibrous glass duct systems, including fittings and accessory items, are capable of maintaining their structural integrity through 50,000 cycles at $1^1/_2$ times system design pressurization. This testing demonstrates the reliability of properly constructed systems, but does not imply that systems should be operated at pressures above their reinforcement rating.

14. Restrictions
Fibrous glass duct systems should not be used in the following applications:
- Kitchen or fume exhaust ducts, or to convey solids or corrosive gases.
- Installation in contact with concrete or buried below grade.
- Outdoors.
- As casings and/or housings of built-up equipment.
- Immediately adjacent to high temperature electric heating coils without radiation protection. Refer to NFPA Standard 90A, and also to pages 3-25 of this Standard, for proper design.
- For vertical risers in air duct systems serving more than two stories.
- With coal or wood fueled equipment.
- In variable air volume systems on the high pressure side unless reinforced to withstand the full fan pressure.
- As penetrations in construction where fire dampers are required, except as shown on page 3-23 with the fire damper installed in a sheet metal sleeve extending through the wall.

15. Mounting of Accessories

When mounting equipment, dampers, damper operators, control motors, etc., the duct system shall be adequately reinforced and supported to accommodate the additional weight of the material and equipment without damage to the duct material. Particularly important is the mounting of both dampers and their operators on the same sleeve or mounting plate.

16. Moisture Control

The following precautions should be taken to avoid soaking of duct board with liquid water:

- When using either evaporative coolers or humidifiers, the immediate area around the device introducing water into the system should be protected by using a drip pan and protective corrosion-resistant sheet metal sleeve.
- Duct systems running through unconditioned space and used for cooling only must be tightly closed during the heating season to prevent accumulation of water vapor in the duct system.
- Fibrous glass duct materials that have become wet at the job-site before or during installation should not be installed. Duct systems which, in service, are found to be wet should be replaced. Consult the product manufacturer for further information.

17. Compliance with Building Codes

Fibrous glass insulated duct systems are acceptable for use in the following model codes and most other applicable codes:

ICC - International Code Council, Inc.

- International Mechanical Code
- International Building Code
- International Residential Code for One and Two Family Dwellings
- International Energy Conservation Code

Note: This code is replacing BOCA, CABO, ICBO, and SBCCI codes, although some juristictions may continue to reference some of them.

Refer to area codes and municipal ordinances for additional local requirements for ducted HVAC systems.

See Appendix for current code edition and how to contact code organizations.

NAIMA
NORTH AMERICAN INSULATION MANUFACTURERS ASSOCIATION

FIBROUS GLASS DUCT SYSTEM INSTALLATION CHECK LIST

All comments should be in the "YES OR N/A" column. If a check mark appears in the "NO" column, bring it to the attention of the HVAC contractor.

Project name and number _____

HVAC contractor _____

Mechanical contractor _____

General contractor _____

Engineer _____ Checklist compiled by _____ Date _____

A. Reference materials needed

1. Latest edition, NAIMA Fibrous Glass Duct Construction Standard (FGDCS)
2. Manufacturer's recommendations (where applicable)
3. Submittal drawings
4. Plans and specifications for job

	YES/NA	NO
B. General		
5. Is fibrous glass duct system installed under conditions permitted in NAIMA manual, pages 1-6 and 1-7?	( )	( )
6. Is system operating within the design limitations for which it was built?	( )	( )
7. Have all tears or punctures of facing material been repaired using proper techniques?	( )	( )
8. Are all sheet metal accessory items galvanized or plated?	( )	( )
C. Product		
9. Is product used identified as duct board by facing imprint?	( )	( )
10. Is UL label present? (While each board has one UL label, not every duct section will be labeled.)	( )	( )
11. Are there NO visual signs of facing delamination (ballooning, condensation if system operating)?	( )	( )
D. Fabrication and installation (See Sections II and III)		
12. Are turning vanes installed in accordance with NAIMA standard? (Pressing your hand into the cheek of the ell will reveal if specified turning vanes are being used.)	( )	( )
13. When metal parts are attached, are 2$^1/_2$" (64mm) square or 3" (76mm) diameter galvanized or plated steel washers installed on 16" (406mm) (max.) centers?	( )	( )
14. Is system completely free from tears or punctures in the facing? (These are readily repaired following procedures given in Section VII of this Standard.)	( )	( )
15. Is system free from areas where excessive amounts of closure materials, such as several wraps around a joint, may have been used to conceal potential problem areas?	( )	( )
16. Are all system joints tight, free from bulges, with joint closures showing good workmanship?	( )	( )
17. Are all fittings fabricated in accordance with instructions in Section III, and do they demonstrate good workmanship?	( )	( )
18. Have offsets been installed so duct sections aren't forced to bend around obstructions?	( )	( )
19. Are all panels in any fitting at least 6" (152mm) (min.) long, including male or female joints?	( )	( )
E. Dampers: See NAIMA FGDCS, pages 3-22.		
20. If a motorized damper is being used, is the sheet metal sleeve extended so the operator is mounted on the same sleeve with the damper?	( )	( )
21. On a manual damper, does the quadrant move a full 90 degrees?	( )	( )
F. Fire dampers: See NAIMA FGDCS, page 3-23.		
22. Is sheet metal sleeve present, and is duct properly attached to it with fasteners on 12" (305mm) (max.) centers? (Fibrous glass ducts must not penetrate assemblies required to have a fire damper.)	( )	( )
23. Is interior sleeve present and properly attached with screws and washers on 16" (406mm) (max.) centers?	( )	( )
G. Flanged heaters: See NAIMA FGDCS, page 3-24.		
24. Are interior sleeves present and properly attached with screws and washers on 16" (406mm) (max.) centers?	( )	( )
25. Is heater properly supported?	( )	( )
H. Slip-in heaters: See NAIMA FGDCS, page 3-25.		
26. Is interior sleeve present and properly attached with screws and washers. Is heater properly supported?	( )	( )

I. Access doors: See FGDCS, pages 3-26 and 3-27.

27. Is installation in accordance with NAIMA Standard? ( ) ( )

J. Grilles, diffusers, registers: See NAIMA FGDCS, pages 3-28 and 3-29.

28. Is the extra weight of the item being separately supported and not dependent on the duct alone for support? (Exception: Registers not greater than 150 square inches may be attached to the duct wall with metal channel, and without other support.) ( ) ( )

K. Unit connection: See NAIMA FGDCS, page 3-30.

29. Are connections to unit or sheet metal ducts in accordance with NAIMA manual standards? (Securing duct to unit flange without mechanical fasteners is insufficient.) ( ) ( )

L. Closure: See NAIMA FGDCS, Section IV.

30. Are all longitudinal seams and circumferential joints properly taped or closed with glass fabric and mastic? ( ) ( )
31. Is the closure system listed under UL 181A, Parts I (P), II (H), or III (M)? ( ) ( )
32. Are staples of the outward clinching type? ( ) ( )
33. When staples are not used, are 8" (203mm) (min.) tape tabs of approved type used in place of staples? (Tab spacing requirements are 12" (305mm) on centers, minimum 1 per side.) ( ) ( )
34. Are staples or tape tabs correctly spaced on circumferential joints? ( ) ( )
35. Are all pressure sensitive tape closures made with tape of proper width, rubbed down adequately, with staples or scrim in facing clearly visible? ( ) ( )
36. Are heat activated closures applied correctly, as shown by changing dot color? ( ) ( )
37. Does tape show manufacturer name, UL 181A nomenclature, and date code? ( ) ( )
38. If glass fabric and mastic are used, is the mesh of the glass fabric completely filled with mastic? ( ) ( )

M. Hangers and supports: See NAIMA FGDCS, Section VI.

39. Are hangers installed in accordance with the hanger schedule published in NAIMA FGDCS, Section VI? ( ) ( )
40. Are hanger designs in accordance with those shown in the NAIMA FGDCS? ( ) ( )
41. Are accessories that add weight to the system separately supported so as not to stress the system? ( ) ( )
42. Are vertical risers limited to systems serving two stories and supported on 12 foot (3.6 m) (max.) centers? ( ) ( )
43. If formed sheet metal reinforcements are used as hangers, are attachments within 6" (152mm) (nom.) of duct sides? ( ) ( )
44. Are all fittings supported by hangers in accordance with NAIMA FGDCS, Section VI? ( ) ( )
45. In humid climates, is system separated at least 1" (25mm) within crawl space or above ceiling insulation? ( ) ( )

N. Reinforcement: See NAIMA FGDCS, Section V.

46. Is reinforcement system of a recommended type (formed metal channel, tie rod, or both)? ( ) ( )
47. Is tie rod wire galvanized, and 12 gauge? ( ) ( )
48. Is tie rod spacing correct according to duct span, board type, and static pressure? ( ) ( )
49. Are tie rod washers 2½" (64mm) square or 3" (76mm) diameter, of galvanized or plated steel, and of proper thickness? ( ) ( )
50. Do tie rod washers have turned edges facing away from duct board so they will not cut into it? ( ) ( )
51. If tie rods reinforce a butt joint, are they used on both sides of the joint? ( ) ( )
52. Is tie rod termination one of those documented in NAIMA FGDCS, or by manufacturer's recommendations? ( ) ( )
53. Are sag support devices used on ducts of 48" (1219mm) span or greater, to support top panels? ( ) ( )
54. Do tie rods run straight through ducts and not at angles except as provided for in reinforcing certain fittings? ( ) ( )
55. Are heels of tees and elbows, and end caps, reinforced when necessary to meet NAIMA FGDCS, Section V requirements? ( ) ( )
56. When formed sheet metal channel reinforcement is used, are sheet metal gauges, dimensions and spacing correct and is sheet metal galvanized? ( ) ( )
57. On supply ducts, is reinforcing member on the female side of the shiplap joint? ( ) ( )
58. On return ducts, is reinforcing member on the male side of the shiplap joint? ( ) ( )
59. On return ducts, are sheet metal channel reinforcements attached to ducts with screws and washers, or with 2" x 6" (51mm x 152mm) clips when located at circumferential joint? ( ) ( )

O. Flexible Duct Connections

60. Are all runs of flexible duct installed in accordance with the NAIMA FGDCS or the Air Diffusion Council Standards manual? ( ) ( )
61. Are all flexible duct connections to fibrous glass duct board made as shown in ADC Standards manual? ( ) ( )
62. Are all runs of flexible duct as straight as possible and free from unnecessary loops or bends? ( ) ( )

SECTION II

FABRICATION OF STRAIGHT DUCT MODULES

PRINCIPLES OF MODULAR DUCT CONSTRUCTION

In designing, fabricating and installing fibrous glass duct systems, the principle of Modular Duct Construction (MDC) is used (see fig. 2-1). This is based on use of the 48" (1219mm) (nominal)* duct module for both straight duct runs and fittings of most types.

The remaining pages of this section show how these objectives are met using the MDC principle.

Use of the MDC principle enhances productivity, minimizes the number of circumferential joints, simplifies fabrication of fittings both in the shop and on the job, and improves the quality of workmanship.

*For actual installed length, subtract shiplap length from nominal:

DUCT BOARD THICKNESS	SHIPLAP LENGTH	INSTALLED DUCT LENGTH
1" (25mm)	$^{7}/_{8}$" (22mm)	$47^{1}/_{8}$" (1197mm)
$1^{1}/_{2}$" (38mm)	$1^{3}/_{8}$" (35mm)	$46^{5}/_{8}$" (1184mm)
2" (51mm)	$1^{7}/_{8}$" (48mm)	$46^{1}/_{8}$" (1172mm)

Application of the MDC principle involves the following design considerations:

- The modified shiplap groove is used in preference to the V-groove method (see page 2-4).
- Elbows and tees are designed to be throatless.
- Transitions are extended to maintain the module dimension.
- Sweep and radius fittings are not used.
- The female end of the duct (without staple flap) is installed away from the unit. The male shiplap end of the duct section is installed facing the fan or equipment.

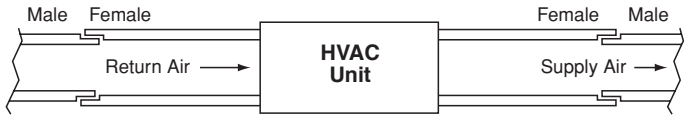

- Branch taps should be made from shiplap panels wherever possible.
- The integrity of the module should be maintained as consistently as possible throughout the system during design, fabrication and installation. Shop drawings and blueprints should reflect this.

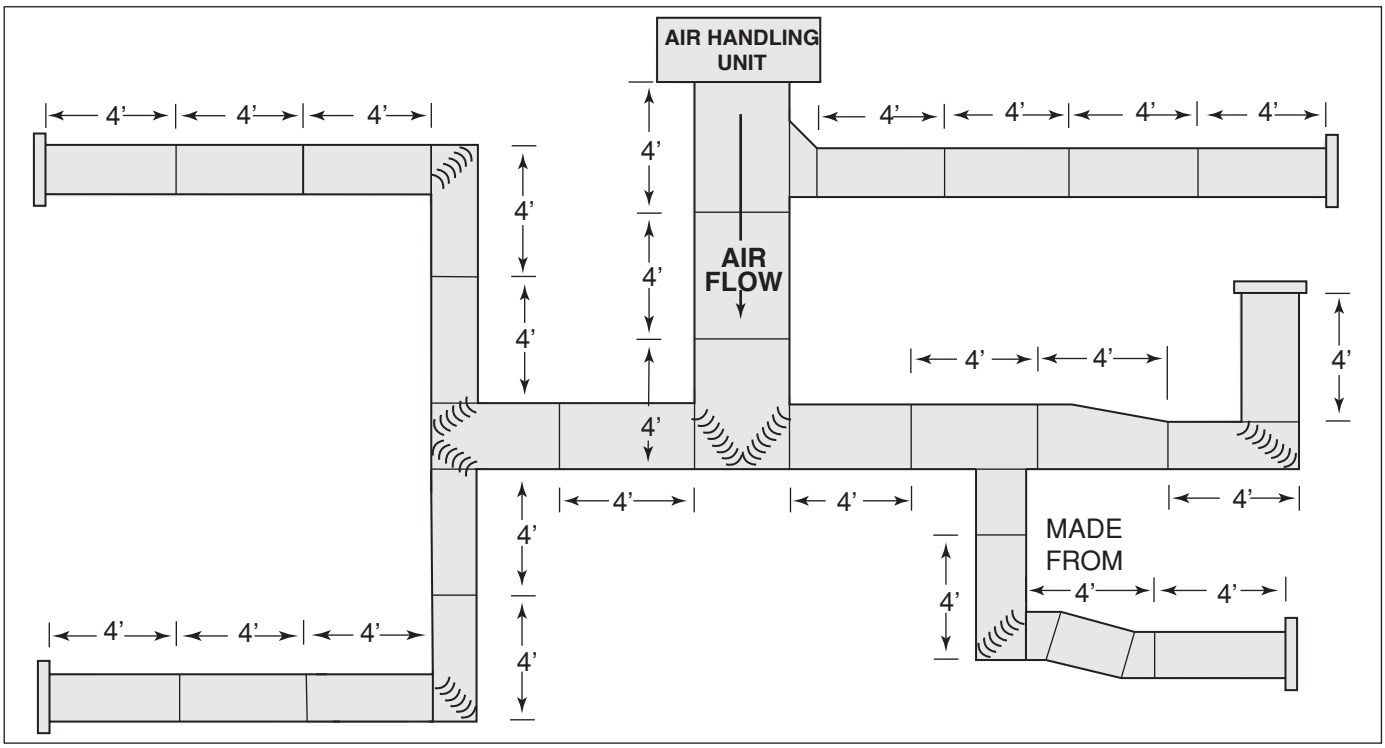

Fig. 2-1. Modular Duct Construction (MDC) Layout.

FABRICATION LOGISTICS

When planning fibrous glass duct system fabrication logistics, the contractor has several choices concerning tools and workplace. Selection of the most suitable fabrication tools, and the best place to do the work, will depend on such considerations as:

• Type of system being installed: extended plenum, radial system with duct board distribution boxes, or simple flexible duct radial system.
• Type of project: whether large or small residential or commercial, single or multi-story.
• Availability of suitable clean, dry work space either at the duct fabricator's shop or on the job-site.
• Availability of trained, experienced workers.

Fabrication Tools

This Standard identifies and describes the use of both hand tools and machines designed for fabrication of fibrous glass duct board. (Fabrication of flexible duct is all done with hand tools.)

• Hand tool fabrication of fibrous glass duct board: Specially designed tools are used to cut grooves and stapling flaps in fibrous glass duct board. See pages 2-5 through 2-7. Straight duct modules are then fabricated by folding, stapling, and sealing grooved boards as described on page 2-20.
• Machine fabrication of fibrous glass duct board: The same grooves and stapling flaps are cut in fibrous glass duct board by powered groove-cutting machines. See pages 2-8 and 2-9. Straight duct modules are then fabricated as described on page 2-20.
• Duct board fitting fabrication: Fittings such as elbows, tees, offsets and transitions are made using hand grooving tools either from straight duct modules or flat duct board. See Section III of this Standard.
• System assembly: Straight duct modules, fittings and rectangular run-outs of fibrous glass duct board are connected by stapling and sealing as shown on page 2-21.
Joints and seams are sealed with pressure sensitive or heat activated aluminum foil tape or with glass fabric and mastic as shown in Section IV of this Standard.

How and Where to Fabricate

Depending on the nature of the job, the contractor has several options as to how and where to fabricate the fibrous glass duct system. Some of these are:

• To fabricate all the straight duct modules and fittings in the shop, using powered grooving and closure machines. This would be a good option if the project requires many duct modules of the same size and/or many fittings of the same design. Since fibrous glass duct elements are light in weight and easy to handle, it may be practical to pre-assemble lengths of duct and truck these to the job-site.
• To do all fabrication work at the job-site, including machine grooving. This might be the best option if the job is a very large one and there is space to set up a job-site shop with room for the machine plus storage space that is clean, warm, and protected from the elements.
• To do all fabrication at the job-site using hand grooving tools.
• To groove the duct board on machines in the shop, shipping the flat grooved board to the job-site where workers can assemble straight modules, fabricate fittings, connect elements, and install the system. A truck can haul much more of a fibrous glass duct system in one load when it's in flat board form than when it consists of fabricated modules and fittings.

In any of the above cases, all duct system materials must be transported and stored so they are protected from exposure to water, dirt, and physical damage. Job-site work areas must be clean, dry, and protected from the weather.

Pressure sensitive tape closures should not be attempted below manufacturer's temperature recommendation. Consult mastic manufacturers regarding protection of material during storage, transportation and installation. Also read and follow instructions on product labels. For complete closure details, refer to Section IV of this Standard.

LAYOUT METHODS

Guide Edge Method

Grooves are cut using a special squaring tool (Fig. 2-2) as a guide edge. Inside dimensions of the duct determine how far the tool is moved after each cut. Various hand tool and squaring tool combinations are available; consult tool manufacturers' literature for instructions.

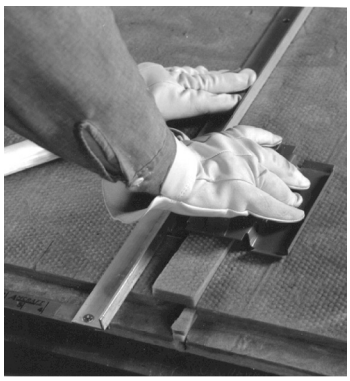

Fig. 2-2. Guide edge layout.

Stretch-out

When laying out a straight duct module, an allowance is added to each inside duct dimension to compensate for the widths of corner breaks and closure flaps. The sum of these allowances is added to the inside duct dimensions (twice the height plus twice the width) to determine "stretch-out," which is the total board length necessary to fabricate a straight duct module with the desired inside dimensions.

Four basic ways to make a duct module

There are four basic ways to fabricate straight duct modules (Fig. 2-4 at right). Stretch-out calculations for each way are shown on pages 2-14 through 2-19. Selection of the best way depends on the duct size, total stretch-out, labor and material optimization, and availability of left-over duct board after large one-piece or two-piece duct modules have been fabricated.

FABRICATION METHODS

Fibrous glass duct board may be fabricated using either of two types of corner joints.

Modified Shiplap

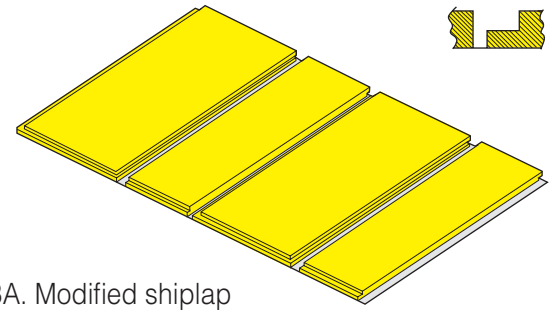

Fig. 2-3A. Modified shiplap

The modified shiplap is considered the industry standard for machine grooving. Hand and machine tools are available for all three thicknesses of duct board.

V-Groove

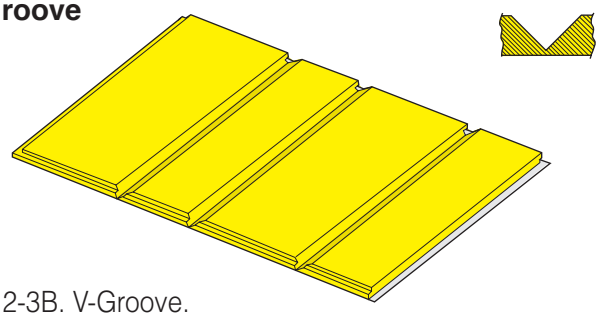

Fig. 2-3B. V-Groove.

This is an alternative method for grooving duct board. Hand and machine tools are available for all three thicknesses of duct board. Fabrication of many of the fittings shown in this manual is not possible using V-grooved duct modules.

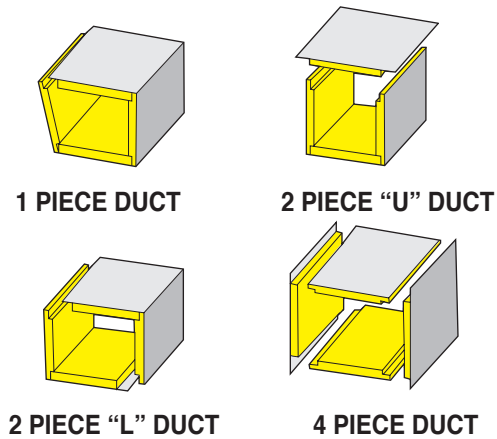

Fig. 2-4. Four ways to make a duct section.

HAND GROOVING TOOLS

Hand grooving tools normally required in fabricating straight sections of fibrous glass duct board are shown below. Correct hand tool blade settings are very important in assuring accurate fabrication, tight joints and connections, and an air-tight duct system that performs to specifications. Be sure to check blade settings before work is started because blades may not be in proper position when the tools arrive from the factory. This will cause inaccurate cuts to be made. Dimensions shown below are nominal and may vary among different tool manufacturers.

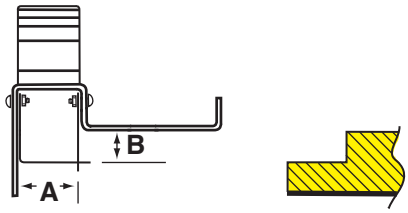

BOARD THICKNESS	A	B
1" (25mm)	7/8" (22mm)	1/2" (13mm)
1 1/2" (38mm)	1 3/8" (35mm)	3/4" (19mm)
2" (51mm)	1 7/8" (48mm)	1" (25mm)

Fig. 2-5A. Female Shiplap Tool - Cuts female slip joint. Also cuts seating edge of duct board at longitudinal closure corner.

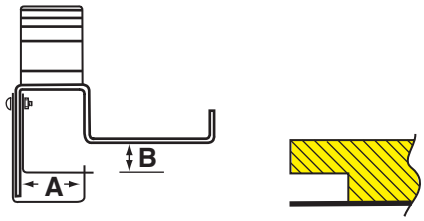

BOARD THICKNESS	A	B
1" (25mm)	7/8" (22mm)	1/2" (13mm)
1 1/2" (38mm)	1 3/8" (35mm)	3/4" (19mm)
2" (51mm)	1 7/8" (48mm)	1" (25mm)

Fig. 2-5D. Male Shiplap Tool - Cuts male slip joint which mates with female slip joint to connect two duct sections.

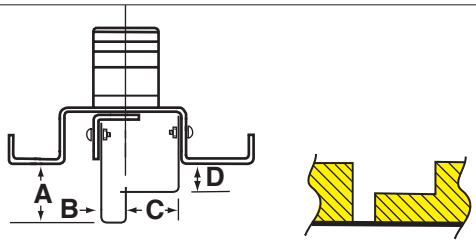

BOARD THICKNESS	A	B	C	D
1" (25mm)	15/16" (24mm)	3/8" (24mm)	7/8" (22mm)	1/2" (13mm)
1 1/2" (38mm)	1 3/8" (35mm)	9/16" (14mm)	1 3/8" (35mm)	11/16" (17mm)
2" (51mm)	1 7/8" (48mm)	7/8" (22mm)	1 7/8" (48mm)	15/16" (24mm)

Fig. 2-5B. Modified Shiplap Tool - Removes insulation for shiplap corner folds. Reversing the tool allows both left hand and right hand shiplaps to be cut.

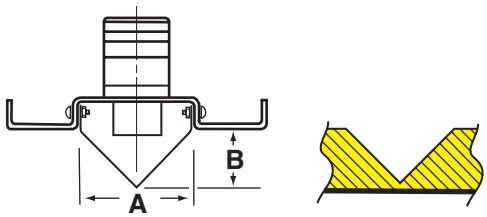

BOARD THICKNESS	A	B
1" (25mm)	1 3/4" (44mm)	7/8" (22mm)
1 1/2" (38mm)	2 3/4" (70mm)	1 3/8" (35mm)
2" (51mm)	3 3/4" (95mm)	1 7/8" (48mm)

Fig. 2-5E. V-Groove Tool - Cuts 90° V-grooves for corner folds when modified shiplap grooving method is not used.

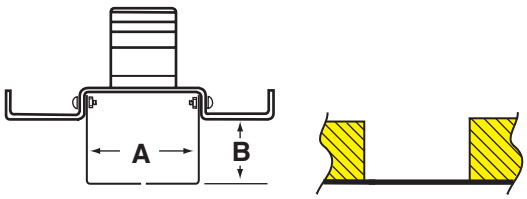

BOARD THICKNESS	A	B
1" (25mm)	1 3/4" (44mm)	1" (25mm)
1 1/2" (38mm)	2 5/8" (67mm)	1 1/2" (38mm)
2" (51mm)	3 1/2" (89mm)	2" (51mm)

Fig. 2-5C. Staple Flap Tool - Used with straight knife to make staple flap and end cut

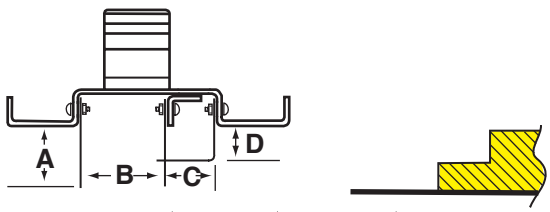

BOARD THICKNESS	A	B	C	D
1" (25mm)	7/8" (22mm)	1 3/8" (35mm)	7/8" (22mm)	1/2" (13mm)
1 1/2" (38mm)	1 3/8" (35mm)	1 11/16" (43mm)	1 3/8" (35mm)	3/4" (19mm)
2" (51mm)	1 3/4" (48mm)	2 1/8" (54mm)	1 3/4" (44mm)	1" (25mm)

Fig. 2-5F. Shiplap and End Cut-Off Tool - Cuts shiplap on end of board for longitudinal corner closure, plus staple flap. May also be used in some fitting fabrication techniques.

HAND FABRICATION, GUIDE EDGE METHOD

Shown on pages 2-6 and 2-7 is the typical method where grooving tools are used working from the right hand side of the guide edge. Some tool manufacturers also provide for using tools by working from the left hand side of the guide edge. Both the squaring tool and hand grooving tools must be changed to accomplish this. Consult tool manufacturers' detailed instructions on using their products.

LAYOUT AND GROOVING

One-piece duct fabrication method is shown. Two-piece "L", two-piece "U", and four-piece fabrication methods are also possible. See pages 2-10 through 2-13 for add-on dimensions.

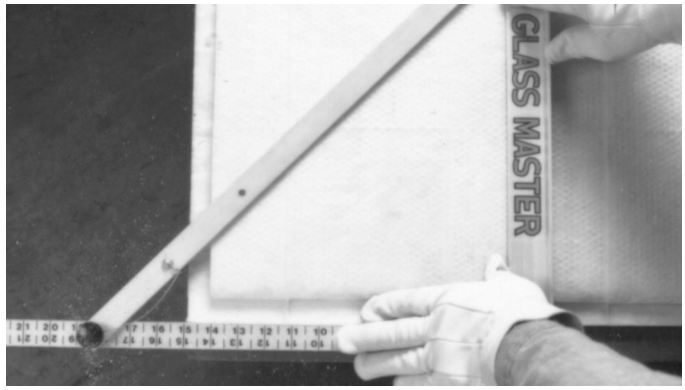

3. Place squaring tool on duct board so rule edge is parallel with factory female shiplap. Line up inside duct width dimension on rule with right hand edge of cut made in Step 2.

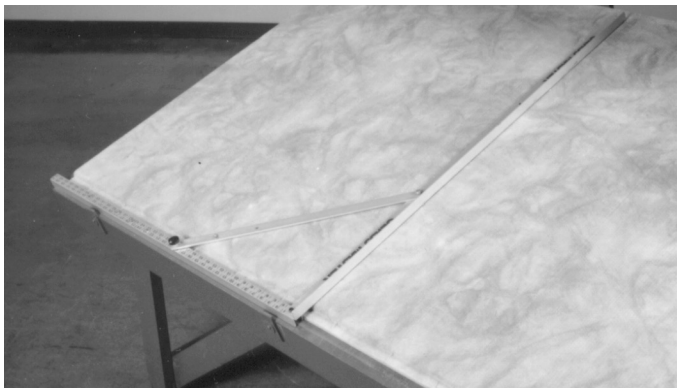

1. For right hand shiplap and staple flap, set up squaring tool as shown above. Guide edge will be at right. Factory female shiplap will be toward you.

4. Place corner grooving tool (modified shiplap or V-groove) along guide edge of squaring tool and cut first corner groove. Remove groove scrap.

2. Cut along left edge of duct board using female shiplap tool to form shiplap edge without closure flap. Remove scrap from groove.

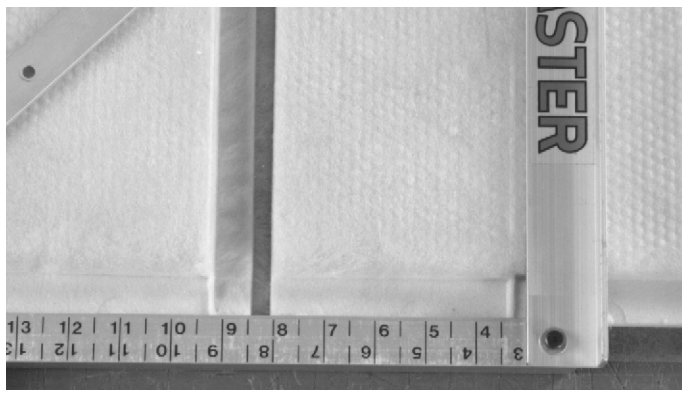

5. Re-position squaring tool to right, lining up desired inside duct height dimension on rule with right hand edge of first corner cut.

6. Rotate corner grooving tool end-for-end (or use next sequentially numbered tool) and place along guide edge of squaring tool to cut second corner groove. Remove groove scrap.

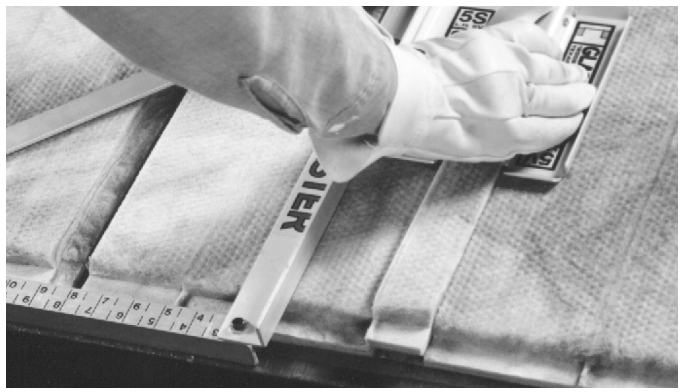

8. Re-position squaring tool to right to make the stapling flap.

7. Re-position squaring tool to the right, to line up desired inside duct width dimension as in Step 3. Cut third corner groove using tool as in Step 4.

9. Using a straight knife, cut through insulation and facing along right hand cut. Peel insulation from closure flap. Board is now ready for assembly and closure to form a straight duct module.

IMPORTANT NOTE:
These instructions are general in nature. Since several manufacturers produce tools and guide edge squares, the tool manufacturer's instructions should be followed. Also, total stretch-out dimensions may vary. Therefore, the user must determine the actual total stretch-out applying to the tools being used.

MACHINE FABRICATION OF STRAIGHT DUCT MODULES - SHIPLAP METHOD

Machine fabrication is fast, accurate, repeatable, and usually more productive than hand fabrication.

Grooving machines can cut all of the corner fold cuts for a one-piece straight module of fibrous glass duct board, plus cutting to correct stretch-out dimensions and finishing the longitudinal seam edges with staple flap, all in one pass. Two-piece “L”, two-piece “U”, and four-piece duct components can also be cut on grooving machines.

The modified shiplap method is recommended for machine fabrication of straight modules of fibrous glass duct board, although V-groove tools for all three duct board thicknesses are available for most grooving machines.

Machine grooving tools have numbered or lettered tabs corresponding to the location and width of the cutting portion. To set up the machine, the interior dimensions of the duct are measured between the tabs on the tools; the tabs represent the necessary add-on allowances.

Closure machines:
These provide tightly sealed longitudinal seams at high production rates. When using approved heat activated tape on closure machines, it is not necessary to staple the longitudinal flap.

TOOLING SET-UP

The typical tooling set-up for one-piece straight duct produces the closure flap at the left hand side of the duct board as it passes through the grooving machine. Tools are identified by letters. See Fig. 2-6A.

OPTIONAL SET-UPS

Figures 2-6B, 2-6C

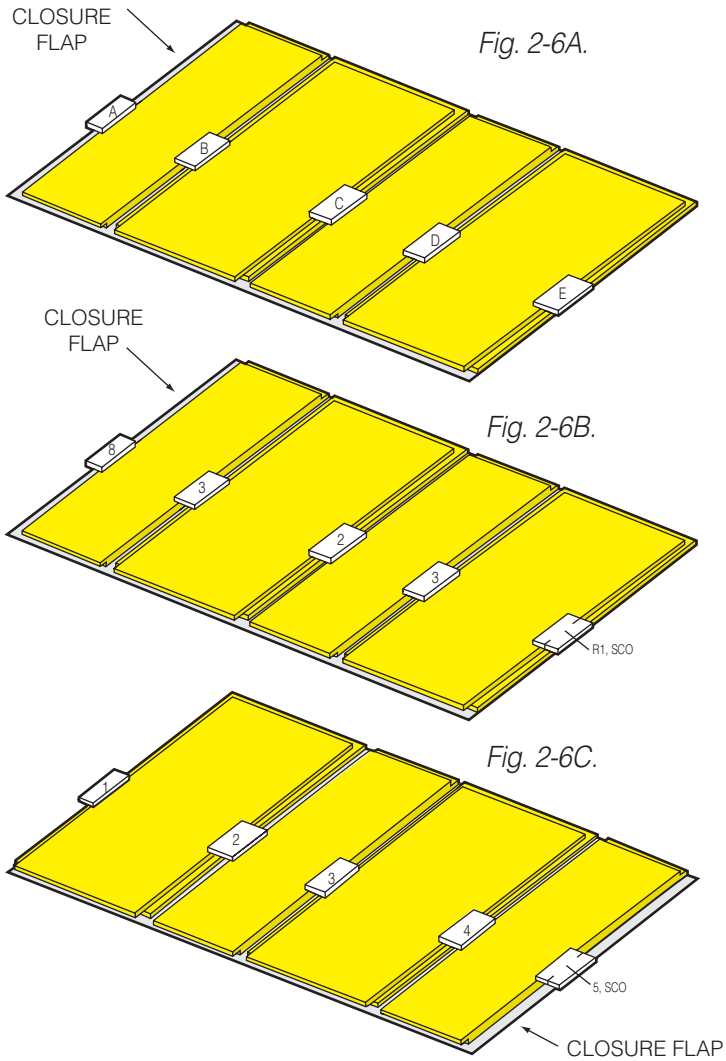

Fig. 2-6A.

Fig. 2-6B.

Fig. 2-6C.

TYPICAL GROOVING MACHINE TOOLS

#1 (or F). Left hand female shiplap tool.

#R1+ SCO (or E). Right hand female shiplap tool.

#2 & #4 (or C). Left hand modified shiplap tool.

#3 (or B). Right hand modified shiplap tool.

#5 SCO (or G). Right hand square cut tool with closure flap.

#6. Left hand female shiplap tool with cutoff.

#7. Right hand female shiplap tool with cutoff.

#8 (or A). Left hand square cut tool with closure flap.

#9. Left hand male shiplap tool.

#0. Right hand male shiplap tool.

#SCO. Straight cutoff tool. May be used with #R1 to make the same cut as #7 tool.

Fig. 2-7. Grooving machine tools.

MACHINE FABRICATION

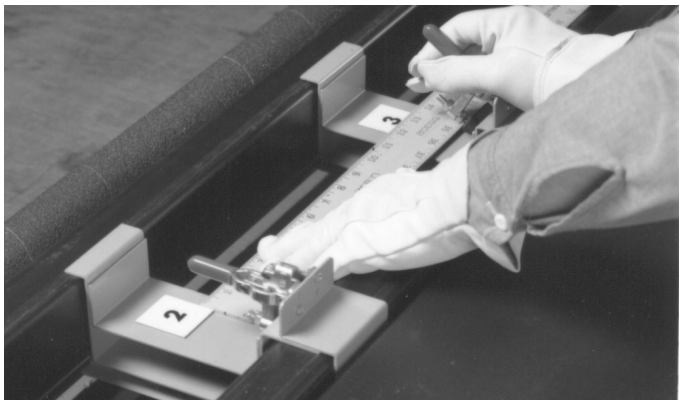

Fig. 2-8. Install tools in grooving machine according to machine manufacturer's instructions, board layout, and cutting plan (see pages 2-10 through 2-13), using either Standard or Preferred tooling set-up (see page 2-10).

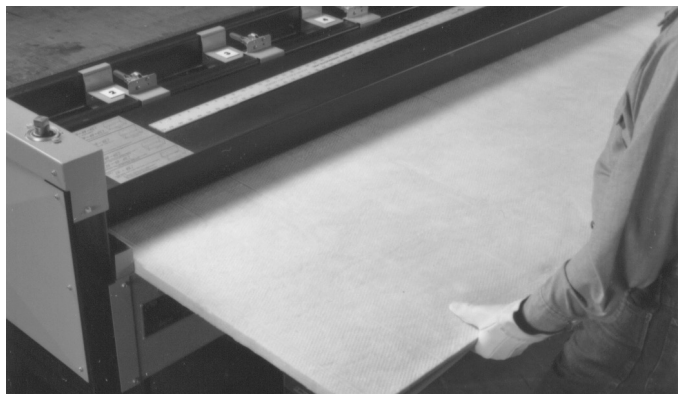

Fig. 2-9. Feed duct board into machine, female shiplap edge first, left hand edge firmly against guide, parallel to rollers. Turn on machine and guide board as friction rollers pick it up and pull it through the cutting tools.

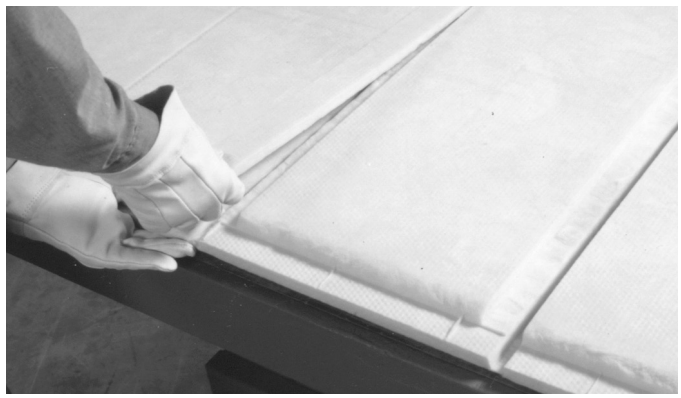

Fig. 2-10. Remove groove scrap. Confirm dimensions. The board is now ready for assembly and closure of a straight duct module, or for fabrication of a fitting.

Fig. 2-11. FABRICATION, ONE-PIECE DUCT

Layout and fabrication methods below are typical. Others are possible. When fabricating by machine, check set-up dimensions carefully. Dimensions may vary from machine to machine.

HAND FABRICATION - SHIPLAP METHOD

TSO = total stretch-out

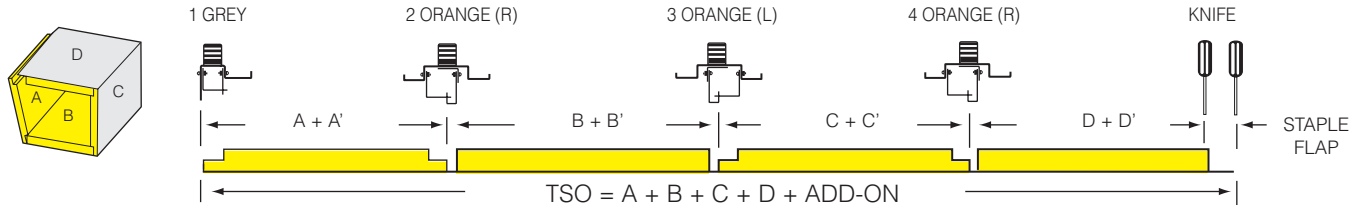

HAND FABRICATION - V-GROOVE METHOD

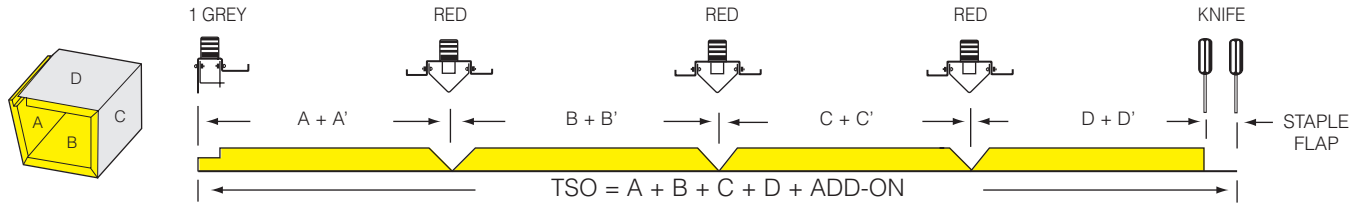

	DUCT BOARD THICKNESS	PANEL ADD-ON DIMENSIONS A'	B'	C'	D'	STAPLING FLAP	STRETCH-OUT ADD-ON
A, B, C, D ARE	1" (25mm)	$1^3/_4$" (44mm)	$1^3/_4$" (44mm)	$1^3/_4$" (44mm)	$1^3/_8$" (35mm)	$1^3/_8$" (35mm)	8" (203mm)
INSIDE	$1^1/_2$" (38mm)	$2^3/_4$" (70mm)	$2^3/_4$" (70mm)	$2^3/_4$" (70mm)	$2^1/_8$" (54mm)	$2^1/_8$" (54mm)	$12^1/_2$" (318mm)
DIMENSIONS	2" (51mm)	$3^3/_4$" (95mm)	$3^3/_4$" (95mm)	$3^3/_4$" (95mm)	$2^7/_8$" (73mm)	$2^1/_2$" (64mm)	$16^5/_8$" (422mm)

MACHINE FABRICATION - OPTION 1

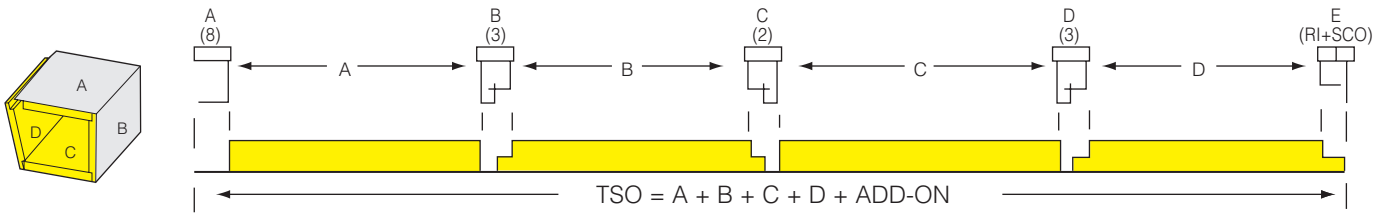

MACHINE FABRICATION - OPTION 2

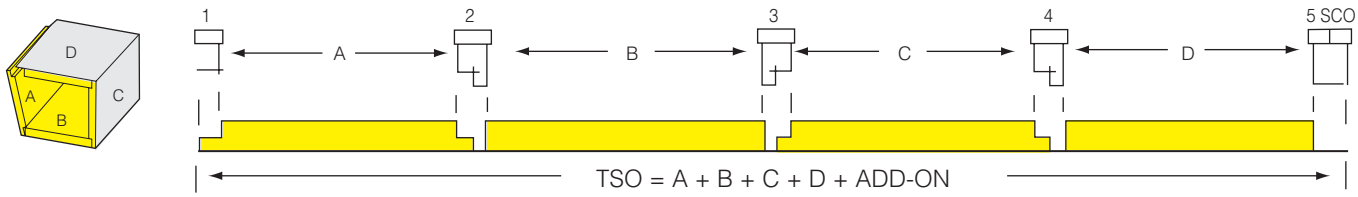

Inside duct dimensions A, B, C, D are measured between tool tabs.

DUCT BOARD THICKNESS	STRETCH-OUT ADD-ON
1" (25mm)	8" (203mm)
$1^1/_2$" (38mm)	12" (305mm)
2" (51mm)	16" (406mm)

Fig. 2-12. FABRICATION, TWO-PIECE U-STYLE DUCT

Layout and fabrication methods below are typical. Others are possible. When fabricating by machine, check set-up dimensions carefully. Dimensions may vary from machine to machine.

HAND FABRICATION - SHIPLAP METHOD

TSO = total stretch-out

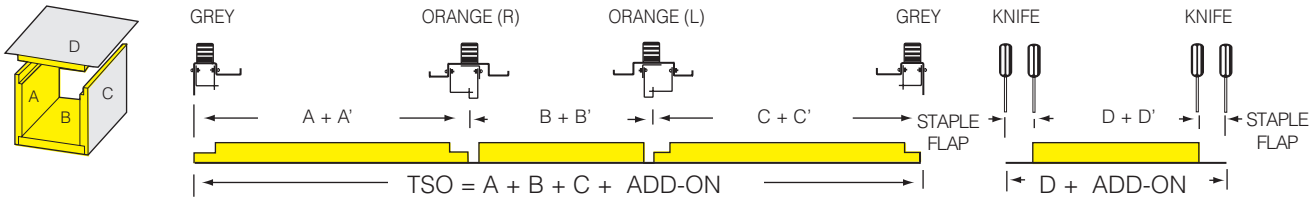

HAND FABRICATION - V-GROOVE METHOD

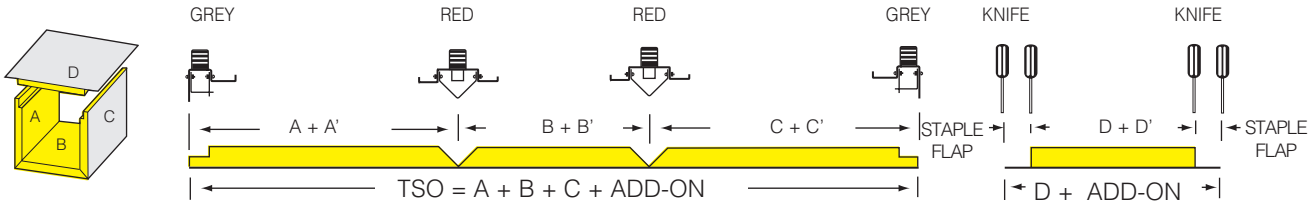

	DUCT BOARD THICKNESS	PANEL ADD-ON A', B', C'	U-SECTION TSO ADD-ON	D'	STAPLING FLAP	PANEL D TSO ADD-ON
A, B, C, D ARE	1" (25mm)	$1\frac{3}{4}$" (44mm)	$5\frac{1}{4}$" (133mm)	1" (25mm)	$1\frac{1}{2}$" (38mm)	4" (102mm)
INSIDE	$1\frac{1}{2}$" (38mm)	$2\frac{3}{4}$" (70mm)	$8\frac{1}{4}$" (210mm)	$1\frac{1}{2}$" (38mm)	$2\frac{1}{8}$" (54mm)	$5\frac{3}{4}$" (146mm)
DIMENSIONS	2" (51mm)	$3\frac{3}{4}$" (95mm)	$11\frac{1}{4}$" (286mm)	2" (51mm)	$2\frac{1}{2}$" (64mm)	7" (178mm)

MACHINE FABRICATION - OPTION 1

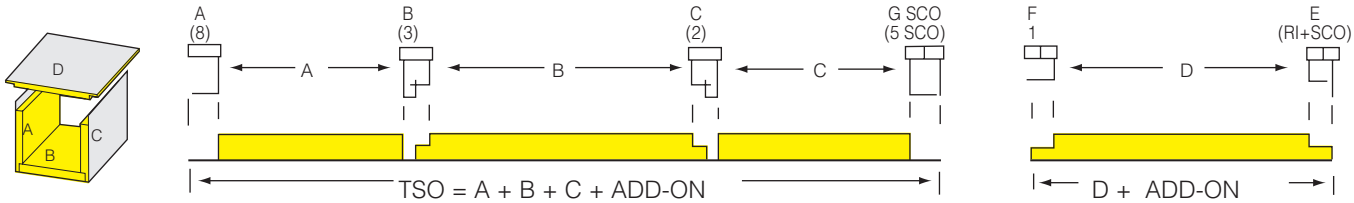

MACHINE FABRICATION - OPTION 2

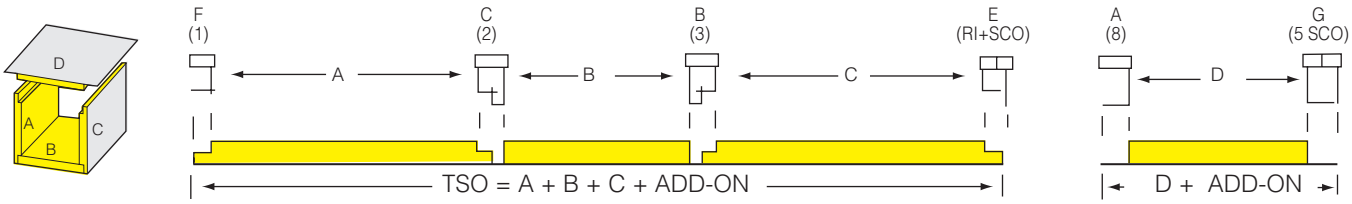

Inside duct dimensions A, B, C, D are measured between tool tabs.

DUCT BOARD THICKNESS	OPTION 1 U-SECTION ADD-ON	OPTION 1 FILLER PANEL ADD-ON	OPTION 2 U-SECTION ADD-ON	OPTION 2 U-SECTION ADD-ON
1" (25mm)	$7\frac{3}{4}$" (197mm)	$1\frac{1}{2}$" (38mm)	$4\frac{3}{4}$" (121mm)	$4\frac{1}{4}$" (108mm)
$1\frac{1}{2}$" (38mm)	11" (279mm)	$2\frac{1}{2}$" (64mm)	$7\frac{5}{8}$" (194mm)	$5\frac{3}{4}$" (146mm)
2" (51mm)	$14\frac{1}{4}$" (362mm)	$3\frac{1}{2}$" (89mm)	$10\frac{1}{2}$" (267mm)	$7\frac{1}{4}$" (184mm)

Fig. 2-13. FABRICATION, TWO-PIECE L-STYLE DUCT

Layout and fabrication methods below are typical. Others are possible. When fabricating by machine, check set-up dimensions carefully. Dimensions may vary from machine to machine.

HAND FABRICATION - SHIPLAP METHOD

TSO = total stretch-out

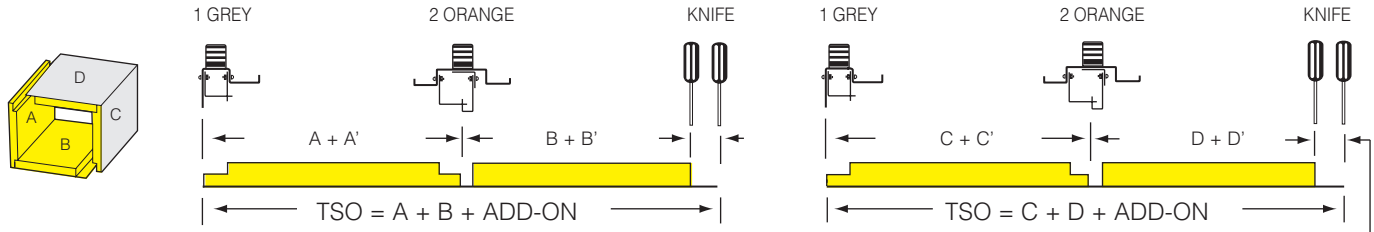

HAND FABRICATION - V-GROOVE METHOD

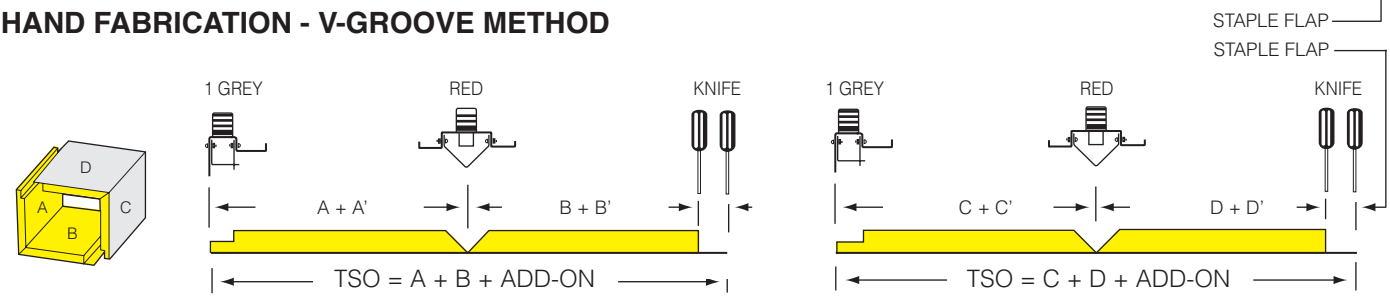

	DUCT BOARD THICKNESS	PANEL ADD-ON DIMENSIONS A'	B'	C'	D'	STAPLE FLAP	TSO ADD-ON
A, B, C, D ARE INSIDE DIMENSIONS	1" (25mm)	$1\frac{3}{4}$" (44mm)	$1\frac{3}{8}$" (35mm)	$1\frac{3}{4}$" (44mm)	$1\frac{3}{8}$" (35mm)	$1\frac{1}{2}$" (38mm)	$4\frac{5}{8}$" (117mm)
	$1\frac{1}{2}$" (38mm)	$2\frac{3}{4}$" (70mm)	$2\frac{1}{8}$" (54mm)	$2\frac{3}{4}$" (70mm)	$2\frac{1}{8}$" (54mm)	$2\frac{1}{8}$" (54mm)	7" (178mm)
	2" (51mm)	$3\frac{3}{4}$" (95mm)	$2\frac{7}{8}$" (73mm)	$3\frac{3}{4}$" (95mm)	$2\frac{7}{8}$" (73mm)	$2\frac{1}{2}$" (64mm)	$9\frac{1}{8}$" (232mm)

MACHINE FABRICATION - OPTION 1

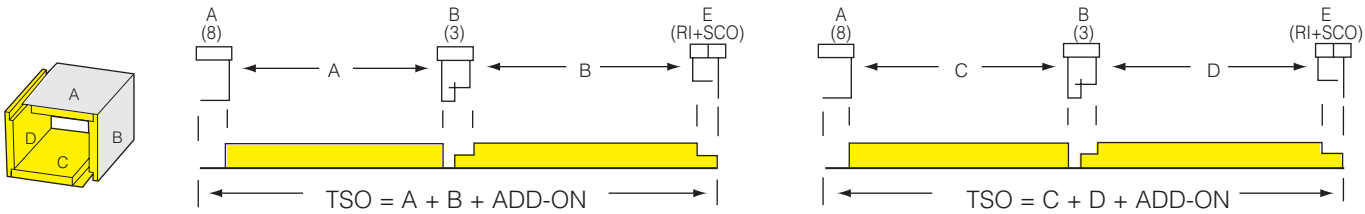

MACHINE FABRICATION - OPTION 2

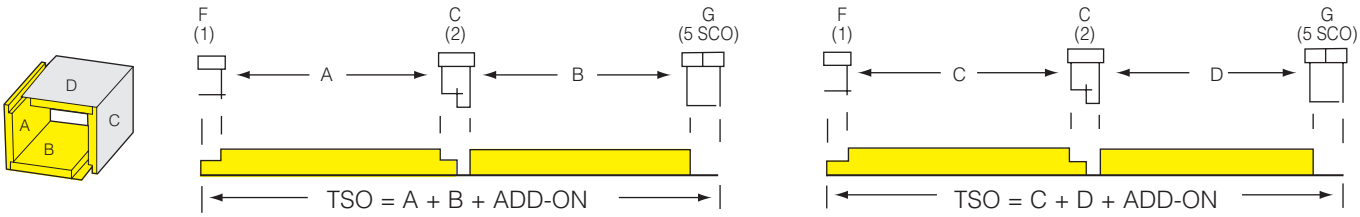

Inside duct dimensions A, B, C, D are measured between tool tabs.

DUCT BOARD THICKNESS	L-SECTION TSO ADD-ON
1" (25mm)	$4\frac{1}{2}$" (114mm)
$1\frac{1}{2}$" (38mm)	$6\frac{3}{4}$" (171mm)
2" (51mm)	$8\frac{7}{8}$" (225mm)

Fig. 2-14. FABRICATION, FOUR-PIECE DUCT

Layout and fabrication methods below are typical. Others are possible. When fabricating by machine, check set-up dimensions carefully. Dimensions may vary from machine to machine.

HAND FABRICATION - HAND TOOL METHOD

TSO = total stretch-out

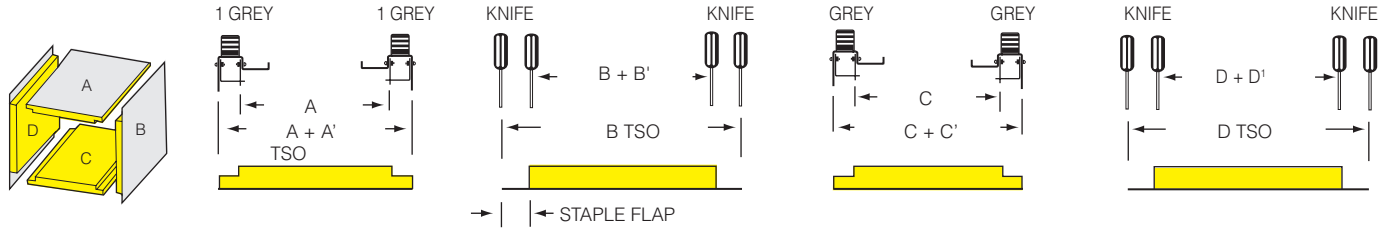

	DUCT BOARD THICKNESS	PANEL ADD-ON DIMENSIONS A' & C'	B' & D'	STAPLE FLAP	B & D TSO ADD-ON
A, B, C, D ARE	1" (25mm)	$1\frac{3}{4}$" (44mm)	1" (25mm)	$1\frac{1}{2}$" (38mm)	4" (102mm)
INSIDE	$1\frac{1}{2}$" (38mm)	$2\frac{3}{4}$" (70mm)	$1\frac{1}{2}$" (38mm)	$2\frac{1}{8}$" (54mm)	$5\frac{3}{4}$" (146mm)
DIMENSIONS	2" (51mm)	$3\frac{3}{4}$" (95mm)	2" (51mm)	$2\frac{1}{2}$" (64mm)	7" (178mm)

MACHINE FABRICATION - OPTION 1

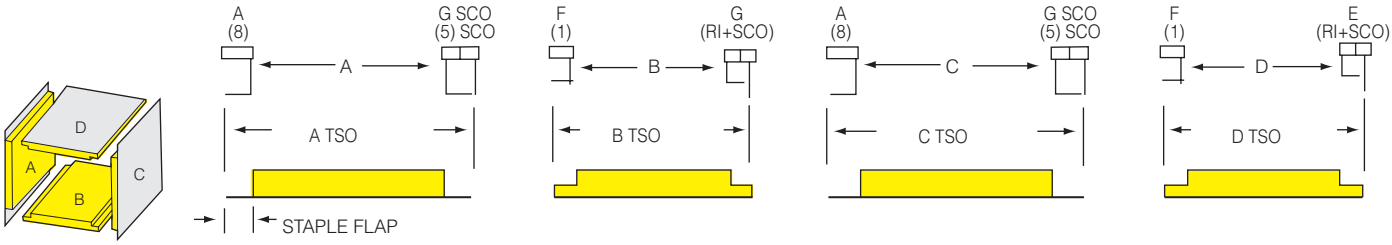

MACHINE FABRICATION - OPTION 2

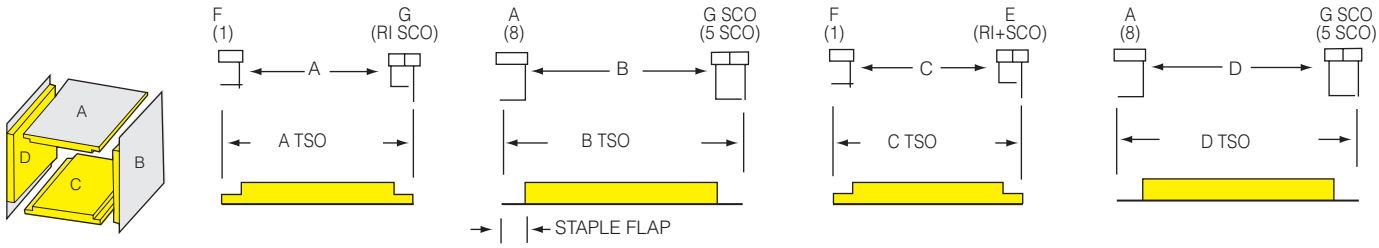

Inside duct dimensions A, B, C, D are measured between tool tabs.

	DUCT BOARD THICKNESS	OPTION 1 - TSO ADD-ON PANELS A & C	PANELS B & D	OPTION 2 - TSO ADD-ON PANELS A & C	PANELS A & C	STAPLE FLAP (REFERENCE)
A, B, C, D ARE	1" (25mm)	$4\frac{1}{4}$" (108mm)	$1\frac{1}{2}$" (38mm)	$1\frac{1}{2}$" (38mm)	$4\frac{1}{4}$" (108mm)	$1\frac{5}{8}$" (41mm)
INSIDE	$1\frac{1}{2}$" (38mm)	$5\frac{3}{4}$" (146mm)	$2\frac{1}{2}$" (64mm)	$2\frac{1}{2}$" (64mm)	$5\frac{3}{4}$" (146mm)	$2\frac{1}{8}$" (54mm)
DIMENSIONS	2" (51mm)	$7\frac{1}{4}$" (184mm)	$3\frac{1}{2}$" (89mm)	$3\frac{1}{2}$" (89mm)	$7\frac{1}{4}$" (184mm)	$2\frac{5}{8}$" (67mm)

ONE PIECE STRETCH-OUT DIMENSIONS IN INCHES, 1" DUCT BOARD

DUCT WIDTH in.	DUCT HEIGHT, in. 6	8	10	12	14	16	18	20	22	24	26	28	30	32	34	36	38	40	42	44	46	48	50
6	32	36	40	44	48	52	56	60	64	68	72	76	80	84	88	92	96	100	104	108	112	116	120
8	36	40	44	48	52	56	60	64	68	72	76	80	84	88	92	96	100	104	108	112	116	120	
10	40	44	48	52	56	60	64	68	72	76	80	84	88	92	96	100	104	108	112	116	120		
12	44	48	52	56	60	64	68	72	76	80	84	88	92	96	100	104	108	112	116	120			
14	48	52	56	60	64	68	72	76	80	84	88	92	96	100	104	108	112	116	120				
16	52	56	60	64	68	72	76	80	84	88	92	96	100	104	108	112	116	120					
18	56	60	64	68	72	76	80	84	88	92	96	100	104	108	112	116	120						
20	60	64	68	72	76	80	84	88	92	96	100	104	108	112	116	120							
22	64	68	72	76	80	84	88	92	96	100	104	108	112	116	120								
24	68	72	76	80	84	88	92	96	100	104	108	112	116	120									
26	72	76	80	84	88	92	96	100	104	108	112	116	120										
28	76	80	84	88	92	96	100	104	108	112	116	120											
30	80	84	88	92	96	100	104	108	112	116	120												
32	84	88	92	96	100	104	108	112	116	120													
34	88	92	96	100	104	108	112	116	120														
36	92	96	100	104	108	112	116	120															
38	96	100	104	108	112	116	120																
40	100	104	108	112	116	120																	
42	104	108	112	116	120																		
44	108	112	116	120																			
46	112	116	120																				
48	116	120																					
50	120																						

NOTE: These tables assume the total stretch-out (add-on) dimension is 8". If the process used results in a different stretch-out dimension, these tables must be modified accordingly.

ONE PIECE STRETCH-OUT DIMENSIONS IN MILLIMETERS, 25mm DUCT BOARD

DUCT WIDTH mm	DUCT HEIGHT, mm 150	200	250	300	350	400	450	500	550	600	650	700	750	800	850	900	950	1000	1050	1100	1150	1200	1250
150	803	903	1003	1103	1203	1303	1403	1503	1603	1703	1803	1903	2003	2103	2203	2303	2403	2503	2603	2703	2803	2903	3003
200	903	1003	1103	1203	1303	1403	1503	1603	1703	1803	1903	2003	2103	2203	2303	2403	2503	2603	2703	2803	2903	3003	
250	1003	1103	1203	1303	1403	1503	1603	1703	1803	1903	2003	2103	2203	2303	2403	2503	2603	2703	2803	2903	3003		
300	1103	1203	1303	1403	1503	1603	1703	1803	1903	2003	2103	2203	2303	2403	2503	2603	2703	2803	2903	3003			
350	1203	1303	1403	1503	1603	1703	1803	1903	2003	2103	2203	2303	2403	2503	2603	2703	2803	2903	3003				
400	1303	1403	1503	1603	1703	1803	1903	2003	2103	2203	2303	2403	2503	2603	2703	2803	2903	3003					
450	1403	1503	1603	1703	1803	1903	2003	2103	2203	2303	2403	2503	2603	2703	2803	2903	3003						
500	1503	1603	1703	1803	1903	2003	2103	2203	2303	2403	2503	2603	2703	2803	2903	3003							
550	1603	1703	1803	1903	2003	2103	2203	2303	2403	2503	2603	2703	2803	2903	3003								
600	1703	1803	1903	2003	2103	2203	2303	2403	2503	2603	2703	2803	2903	3003									
650	1803	1903	2003	2103	2203	2303	2403	2503	2603	2703	2803	2903	3003										
700	1903	2003	2103	2203	2303	2403	2503	2603	2703	2803	2903	3003											
750	2003	2103	2203	2303	2403	2503	2603	2703	2803	2903	3003												
800	2103	2203	2303	2403	2503	2603	2703	2803	2903	3003													
850	2203	2303	2403	2503	2603	2703	2803	2903	3003														
900	2303	2403	2503	2603	2703	2803	2903	3003															
950	2403	2503	2603	2703	2803	2903	3003																
1000	2503	2603	2703	2803	2903	3003																	
1050	2603	2703	2803	2903	3003																		
1100	2703	2803	2903	3003																			
1150	2803	2903	3003																				
1200	2903	3003																					
1250	3003																						

NOTE: These tables assume the total stretch-out (add-on) dimension is 203mm. If the process used results in a different stretch-out dimension, these tables must be modified accordingly.

BOARD UTILIZATION, ONE PIECE DUCT, 1" DUCT BOARD, FT² PER LINEAL FOOT OF DUCT

DUCT WIDTH in.	DUCT HEIGHT, in. 6	8	10	12	14	16	18	20	22	24	26	28	30	32	34	36	38	40	42	44	46	48	50
6	2.7	3.0	3.3	3.7	4.0	4.3	4.7	5.0	5.3	5.7	6.0	6.3	6.7	7.0	7.3	7.7	8.0	8.3	8.7	9.0	9.3	9.7	10.0
8	3.0	3.3	3.7	4.0	4.3	4.7	5.0	5.3	5.7	6.0	6.3	6.7	7.0	7.3	7.7	8.0	8.3	8.7	9.0	9.3	9.7	10.0	
10	3.3	3.7	4.0	4.3	4.7	5.0	5.3	5.7	6.0	6.3	6.7	7.0	7.3	7.7	8.0	8.3	8.7	9.0	9.3	9.7	10.0		
12	3.7	4.0	4.3	4.7	5.0	5.3	5.7	6.0	6.3	6.7	7.0	7.3	7.7	8.0	8.3	8.7	9.0	9.3	9.7	10.0			
14	4.0	4.3	4.7	5.0	5.3	5.7	6.0	6.3	6.7	7.0	7.3	7.7	8.0	8.3	8.7	9.0	9.3	9.7	10.0				
16	4.3	4.7	5.0	5.3	5.7	6.0	6.3	6.7	7.0	7.3	7.7	8.0	8.3	8.7	9.0	9.3	9.7	10.0					
18	4.7	5.0	5.3	5.7	6.0	6.3	6.7	7.0	7.3	7.7	8.0	8.3	8.7	9.0	9.3	9.7	10.0						
20	5.0	5.3	5.7	6.0	6.3	6.7	7.0	7.3	7.7	8.0	8.3	8.7	9.0	9.3	9.7	10.0							
22	5.3	5.7	6.0	6.3	6.7	7.0	7.3	7.7	8.0	8.3	8.7	9.0	9.3	9.7	10.0								
24	5.7	6.0	6.3	6.7	7.0	7.3	7.7	8.0	8.3	8.7	9.0	9.3	9.7	10.0									
26	6.0	6.3	6.7	7.0	7.3	7.7	8.0	8.3	8.7	9.0	9.3	9.7	10.0										
28	6.3	6.7	7.0	7.3	7.7	8.0	8.3	8.7	9.0	9.3	9.7	10.0											
30	6.7	7.0	7.3	7.7	8.0	8.3	8.7	9.0	9.3	9.7	10.0												
32	7.0	7.3	7.7	8.0	8.3	8.7	9.0	9.3	9.7	10.0													
34	7.3	7.7	8.0	8.3	8.7	9.0	9.3	9.7	10.0														
36	7.7	8.0	8.3	8.7	9.0	9.3	9.7	10.0															
38	8.0	8.3	8.7	9.0	9.3	9.7	10.0																
40	8.3	8.7	9.0	9.3	9.7	10.0																	
42	8.7	9.0	9.3	9.7	10.0																		
44	9.0	9.3	9.7	10.0																			
46	9.3	9.7	10.0																				
48	9.7	10.0																					
50	10.0																						

NOTE: This table is based on a total add-on allowance of 8". If the process and tools used result in a different add-on allowance, these tables must be modified accordingly.

BOARD UTILIZATION, ONE PIECE DUCT, 25mm DUCT BOARD, m² PER LINEAL METER OF DUCT

DUCT WIDTH mm	DUCT HEIGHT, mm 150	200	250	300	350	400	450	500	550	600	650	700	750	800	850	900	950	1000	1050	1100	1150	1200	1250
150	0.80	0.90	1.00	1.10	1.20	1.30	1.40	1.50	1.60	1.70	1.80	1.90	2.00	2.10	2.20	2.30	2.40	2.50	2.60	2.70	2.80	2.90	3.00
200	0.90	1.00	1.10	1.20	1.30	1.40	1.50	1.60	1.70	1.80	1.90	2.00	2.10	2.20	2.30	2.40	2.50	2.60	2.70	2.80	2.90	3.00	
250	1.00	1.10	1.20	1.30	1.40	1.50	1.60	1.70	1.80	1.90	2.00	2.10	2.20	2.30	2.40	2.50	2.60	2.70	2.80	2.90	3.00		
300	1.10	1.20	1.30	1.40	1.50	1.60	1.70	1.80	1.90	2.00	2.10	2.20	2.30	2.40	2.50	2.60	2.70	2.80	2.90	3.00			
350	1.20	1.30	1.40	1.50	1.60	1.70	1.80	1.90	2.00	2.10	2.20	2.30	2.40	2.50	2.60	2.70	2.80	2.90	3.00				
400	1.30	1.40	1.50	1.60	1.70	1.80	1.90	2.00	2.10	2.20	2.30	2.40	2.50	2.60	2.70	2.80	2.90	3.00					
450	1.40	1.50	1.60	1.70	1.80	1.90	2.00	2.10	2.20	2.30	2.40	2.50	2.60	2.70	2.80	2.90	3.00						
500	1.50	1.60	1.70	1.80	1.90	2.00	2.10	2.20	2.30	2.40	2.50	2.60	2.70	2.80	2.90	3.00							
550	1.60	1.70	1.80	1.90	2.00	2.10	2.20	2.30	2.40	2.50	2.60	2.70	2.80	2.90	3.00								
600	1.70	1.80	1.90	2.00	2.10	2.20	2.30	2.40	2.50	2.60	2.70	2.80	2.90	3.00									
650	1.80	1.90	2.00	2.10	2.20	2.30	2.40	2.50	2.60	2.70	2.80	2.90	3.00										
700	1.90	2.00	2.10	2.20	2.30	2.40	2.50	2.60	2.70	2.80	2.90	3.00											
750	2.00	2.10	2.20	2.30	2.40	2.50	2.60	2.70	2.80	2.90	3.00												
800	2.10	2.20	2.30	2.40	2.50	2.60	2.70	2.80	2.90	3.00													
850	2.20	2.30	2.40	2.50	2.60	2.70	2.80	2.90	3.00														
900	2.30	2.40	2.50	2.60	2.70	2.80	2.90	3.00															
950	2.40	2.50	2.60	2.70	2.80	2.90	3.00																
1000	2.50	2.60	2.70	2.80	2.90	3.00																	
1050	2.60	2.70	2.80	2.90	3.00																		
1100	2.70	2.80	2.90	3.00																			
1150	2.80	2.90	3.00																				
1200	2.90	3.00																					
1250	3.00																						

NOTE: This table is based on a total add-on allowance of 203mm. If the process and tools used result in a different add-on allowance, these tables must be modified accordingly.

ONE PIECE STRETCH-OUT DIMENSIONS IN INCHES, 1½" DUCT BOARD

DUCT WIDTH in.	DUCT HEIGHT, in. 6	8	10	12	14	16	18	20	22	24	26	28	30	32	34	36	38	40	42	44	46	48
6	36	40	44	48	52	56	60	64	68	72	76	80	84	88	92	96	100	104	108	112	116	120
8	40	44	48	52	56	60	64	68	72	76	80	84	88	92	96	100	104	108	112	116	120	
10	44	48	52	56	60	64	68	72	76	80	84	88	92	96	100	104	108	112	116	120		
12	48	52	56	60	64	68	72	76	80	84	88	92	96	100	104	108	112	116	120			
14	52	56	60	64	68	72	76	80	84	88	92	96	100	104	108	112	116	120				
16	56	60	64	68	72	76	80	84	88	92	96	100	104	108	112	116	120					
18	60	64	68	72	76	80	84	88	92	96	100	104	108	112	116	120						
20	64	68	72	76	80	84	88	92	96	100	104	108	112	116	120							
22	68	72	76	80	84	88	92	96	100	104	108	112	116	120								
24	72	76	80	84	88	92	96	100	104	108	112	116	120									
26	76	80	84	88	92	96	100	104	108	112	116	120										
28	80	84	88	92	96	100	104	108	112	116	120											
30	84	88	92	96	100	104	108	112	116	120												
32	88	92	96	100	104	108	112	116	120													
34	92	96	100	104	108	112	116	120														
36	96	100	104	108	112	116	120															
38	100	104	108	112	116	120																
40	104	108	112	116	120																	
42	108	112	116	120																		
44	112	116	120																			
46	116	120																				
48	120																					

NOTE: These tables assume the total stretch-out (add-on) dimension is 12". If the process used results in a different stretch-out dimension, these tables must be modified accordingly.

ONE PIECE STRETCH-OUT DIMENSIONS IN MILLIMETERS, 38mm DUCT BOARD

DUCT WIDTH mm	DUCT HEIGHT, mm 150	200	250	300	350	400	450	500	550	600	650	700	750	800	850	900	950	1000	1050	1100	1150	1200
150	905	1005	1105	1201	1305	1405	1505	1605	1705	1805	1905	2005	2105	2205	2305	2405	2505	2605	2705	2805	2905	3005
200	1005	1105	1205	1305	1405	1505	1605	1705	1805	1905	2005	2105	2205	2305	2405	2505	2605	2705	2805	2905	3005	
250	1105	1205	1305	1405	1505	1605	1705	1805	1905	2005	2105	2205	2305	2405	2505	2605	2705	2805	2905	3005		
300	1205	1305	1405	1505	1605	1705	1805	1905	2005	2105	2205	2305	2405	2505	2605	2705	2805	2905	3005			
350	1305	1405	1505	1605	1705	1805	1905	2005	2105	2205	2305	2405	2505	2605	2705	2805	2905	3005				
400	1405	1505	1605	1705	1805	1905	2005	2105	2205	2305	2405	2505	2605	2705	2805	2905	3005					
450	1505	1605	1705	1805	1905	2005	2105	2205	2305	2405	2505	2605	2705	2805	2905	3005						
500	1605	1705	1805	1905	2005	2105	2205	2305	2405	2505	2605	2705	2805	2905	3005							
550	1705	1805	1905	2005	2105	2205	2305	2405	2505	2605	2705	2805	2905	3005								
600	1805	1905	2005	2105	2205	2305	2405	2505	2605	2705	2805	2905	3005									
650	1905	2005	2105	2205	2305	2405	2505	2605	2705	2805	2905	3005										
700	2005	2105	2205	2305	2405	2505	2605	2705	2805	2905	3005											
750	2105	2205	2305	2405	2505	2605	2705	2805	2905	3005												
800	2205	2305	2405	2505	2605	2705	2805	2905	3005													
850	2305	2405	2505	2605	2705	2805	2905	3005														
900	2405	2505	2605	2705	2805	2905	3005															
950	2505	2605	2705	2805	2905	3005																
1000	2605	2705	2805	2905	3005																	
1050	2705	2805	2905	3005																		
1100	2805	2905	3005																			
1150	2905	3005																				
1200	3005																					

NOTE: These tables assume the total stretch-out (add-on) dimension is 305mm. If the process used results in a different stretch-out dimension, these tables must be modified accordingly.

BOARD UTILIZATION, ONE PIECE DUCT, 1½" DUCT BOARD, FT² PER LINEAL FOOT OF DUCT

DUCT WIDTH in.	DUCT HEIGHT, in. 6	8	10	12	14	16	18	20	22	24	26	28	30	32	34	36	38	40	42	44	46	48
6	3.0	3.3	3.7	4.0	4.3	4.7	5.0	5.3	5.7	6.0	6.3	6.7	7.0	7.3	7.7	8.0	8.3	8.7	9.0	9.3	9.7	10.0
8	3.3	3.7	4.0	4.3	4.7	5.0	5.3	5.7	6.0	6.3	6.7	7.0	7.3	7.7	8.0	8.3	8.7	9.0	9.3	9.7	10.0	
10	3.7	4.0	4.3	4.7	5.0	5.3	5.7	6.0	6.3	6.7	7.0	7.3	7.7	8.0	8.3	8.7	9.0	9.3	9.7	10.0		
12	4.0	4.3	4.7	5.0	5.3	5.7	6.0	6.3	6.7	7.0	7.3	7.7	8.0	8.3	8.7	9.0	9.3	9.7	10.0			
14	4.3	4.7	5.0	5.3	5.7	6.0	6.3	6.7	7.0	7.3	7.7	8.0	8.3	8.7	9.0	9.3	9.7	10.0				
16	4.7	5.0	5.3	5.7	6.0	6.3	6.7	7.0	7.3	7.7	8.0	8.3	8.7	9.0	9.3	9.7	10.0					
18	5.0	5.3	5.7	6.0	6.3	6.7	7.0	7.3	7.7	8.0	8.3	8.7	9.0	9.3	9.7	10.0						
20	5.3	5.7	6.0	6.3	6.7	7.0	7.3	7.7	8.0	8.3	8.7	9.0	9.3	9.7	10.0							
22	5.7	6.0	6.3	6.7	7.0	7.3	7.7	8.0	8.3	8.7	9.0	9.3	9.7	10.0								
24	6.0	6.3	6.7	7.0	7.3	7.7	8.0	8.3	8.7	9.0	9.3	9.7	10.0									
26	6.3	6.7	7.0	7.3	7.7	8.0	8.3	8.7	9.0	9.3	9.7	10.0										
28	6.7	7.0	7.3	7.7	8.0	8.3	8.7	9.0	9.3	9.7	10.0											
30	7.0	7.3	7.7	8.0	8.3	8.7	9.0	9.3	9.7	10.0												
32	7.3	7.7	8.0	8.3	8.7	9.0	9.3	9.7	10.0													
34	7.7	8.0	8.3	8.7	9.0	9.3	9.7	10.0														
36	8.0	8.3	8.7	9.0	9.3	9.7	10.0															
38	8.3	8.7	9.0	9.3	9.7	10.0																
40	8.7	9.0	9.3	9.7	10.0																	
42	9.0	9.3	9.7	10.0																		
44	9.3	9.7	10.0																			
46	9.7	10.0																				
48	10.0																					

NOTE: This table is based on a total add-on allowance of 12". If the process and tools used result in a different add-on allowance, these tables must be modified accordingly.

BOARD UTILIZATION, ONE PIECE DUCT, 38mm DUCT BOARD, m² PER LINEAL METER OF DUCT

DUCT WIDTH mm	DUCT HEIGHT, mm 150	200	250	300	350	400	450	500	550	600	650	700	750	800	850	900	950	1000	1050	1100	1150	1200
150	0.91	1.01	1.11	1.21	1.31	1.41	1.51	1.61	1.71	1.81	1.91	2.01	2.11	2.21	2.31	2.41	2.51	2.61	2.71	2.81	2.91	3.01
200	1.01	1.11	1.21	1.31	1.41	1.51	1.61	1.71	1.81	1.91	2.01	2.11	2.21	2.31	2.41	2.51	2.61	2.71	2.81	2.91	3.01	
250	1.11	1.21	1.31	1.41	1.51	1.61	1.71	1.81	1.91	2.01	2.11	2.21	2.31	2.41	2.51	2.61	2.71	2.81	2.91	3.01		
300	1.21	1.31	1.41	1.51	1.61	1.71	1.81	1.91	2.01	2.11	2.21	2.31	2.41	2.51	2.61	2.71	2.81	2.91	3.01			
350	1.31	1.41	1.51	1.61	1.71	1.81	1.91	2.01	2.11	2.21	2.31	2.41	2.51	2.61	2.71	2.81	2.91	3.01				
400	1.41	1.51	1.61	1.71	1.81	1.91	2.01	2.11	2.21	2.31	2.41	2.51	2.61	2.71	2.81	2.91	3.01					
450	1.51	1.61	1.71	1.81	1.91	2.01	2.11	2.21	2.31	2.41	2.51	2.61	2.71	2.81	2.91	3.01						
500	1.61	1.71	1.81	1.91	2.01	2.11	2.21	2.31	2.41	2.51	2.61	2.71	2.81	2.91	3.01							
550	1.71	1.81	1.91	2.01	2.11	2.21	2.31	2.41	2.51	2.61	2.71	2.81	2.91	3.01								
600	1.81	1.91	2.01	2.11	2.21	2.31	2.41	2.51	2.61	2.71	2.81	2.91	3.01									
650	1.91	2.01	2.11	2.21	2.31	2.41	2.51	2.61	2.71	2.81	2.91	3.01										
700	2.01	2.11	2.21	2.31	2.41	2.51	2.61	2.71	2.81	2.91	3.01											
750	2.11	2.21	2.31	2.41	2.51	2.61	2.71	2.81	2.91	3.01												
800	2.21	2.31	2.41	2.51	2.61	2.71	2.81	2.91	3.01													
850	2.31	2.41	2.51	2.61	2.71	2.81	2.91	3.01														
900	2.41	2.51	2.61	2.71	2.81	2.91	3.01															
950	2.51	2.61	2.71	2.81	2.91	3.01																
1000	2.61	2.71	2.81	2.91	3.01																	
1050	2.71	2.81	2.91	3.01																		
1100	2.81	2.91	3.01																			
1150	2.91	3.01																				
1200	3.01																					

NOTE: This table is based on a total add-on allowance of 305mm. If the process and tools used result in a different add-on allowance, these tables must be modified accordingly.

ONE PIECE STRETCH-OUT DIMENSIONS IN INCHES, 2" DUCT BOARD

DUCT WIDTH in.	DUCT HEIGHT, in. 6	8	10	12	14	16	18	20	22	24	26	28	30	32	34	36	38	40	42	44	46
6	40	44	48	52	56	60	64	68	72	76	80	84	88	92	96	100	104	108	112	116	120
8	44	48	52	56	60	64	68	72	76	80	84	88	92	96	100	104	108	112	116	120	
10	48	52	56	60	64	68	72	76	80	84	88	92	96	100	104	108	112	116	120		
12	52	56	60	64	68	72	76	80	84	88	92	96	100	104	108	112	116	120			
14	56	60	64	68	72	76	80	84	88	92	96	100	104	108	112	116	120				
16	60	64	68	72	76	80	84	88	92	96	100	104	108	112	116	120					
18	64	68	72	76	80	84	88	92	96	100	104	108	112	116	120						
20	68	72	76	80	84	88	92	96	100	104	108	112	116	120							
22	72	76	80	84	88	92	96	100	104	108	112	116	120								
24	76	80	84	88	92	96	100	104	108	112	116	120									
26	80	84	88	92	96	100	104	108	112	116	120										
28	84	88	92	96	100	104	108	112	116	120											
30	88	92	96	100	104	108	112	116	120												
32	92	96	100	104	108	112	116	120													
34	96	100	104	108	112	116	120														
36	100	104	108	112	116	120															
38	104	108	112	116	120																
40	108	112	116	120																	
42	112	116	120																		
44	116	120																			
46	120																				

NOTE: This table assumes the total stretch-out (add-on) dimension is 16". If the process used results in a different stretch-out (add-on) dimension, this table must be modified accordingly.

ONE PIECE STRETCH-OUT DIMENSIONS IN MILLIMETERS, 51mm DUCT BOARD

DUCT WIDTH mm	DUCT HEIGHT, mm 150	200	250	300	350	400	450	500	550	600	650	700	750	800	850	900	950	1000	1050	1100	1150
150	1006	1106	1206	1306	1406	1506	1606	1706	1806	1906	2006	2106	2206	2306	2406	2506	2606	2706	2806	2906	3006
200	1106	1206	1306	1406	1506	1606	1706	1806	1906	2006	2106	2206	2306	2406	2506	2606	2706	2806	2906	3006	
250	1206	1306	1406	1506	1606	1706	1806	1906	2006	2106	2206	2306	2406	2506	2606	2706	2806	2906	3006		
300	1306	1406	1506	1606	1706	1806	1906	2006	2106	2206	2306	2406	2506	2606	2706	2806	2906	3006			
350	1406	1506	1606	1706	1806	1906	2006	2106	2206	2306	2406	2506	2606	2706	2806	2906	3006				
400	1506	1606	1706	1806	1906	2006	2106	2206	2306	2406	2506	2606	2706	2806	2906	3006					
450	1606	1706	1806	1906	2006	2106	2206	2306	2406	2506	2606	2706	2806	2906	3006						
500	1706	1806	1906	2006	2106	2206	2306	2406	2506	2606	2706	2806	2906	3006							
550	1806	1906	2006	2106	2206	2306	2406	2506	2606	2706	2806	2906	3006								
600	1906	2006	2106	2206	2306	2406	2506	2606	2706	2806	2906	3006									
650	2006	2106	2206	2306	2406	2506	2606	2706	2806	2906	3006										
700	2106	2206	2306	2406	2506	2606	2706	2806	2906	3006											
750	2206	2306	2406	2506	2606	2706	2806	2906	3006												
800	2306	2406	2506	2606	2706	2806	2906	3006													
850	2406	2506	2606	2706	2806	2906	3006														
900	2506	2606	2706	2806	2906	3006															
950	2606	2706	2806	2906	3006																
1000	2706	2806	2906	3006																	
1050	2806	2906	3006																		
1100	2906	3006																			
1150	3006																				

NOTE: This table assumes the total stretch-out (add-on) dimension is 406mm. If the process used results in a different stretch-out (add-on) dimension, this table must be modified accordingly.

BOARD UTILIZATION, ONE PIECE DUCT, 2" DUCT BOARD, FT² PER LINEAL FOOT OF DUCT

DUCT WIDTH in.	DUCT HEIGHT, in. 6	8	10	12	14	16	18	20	22	24	26	28	30	32	34	36	38	40	42	44	46
6	3.3	3.7	4.0	4.3	4.7	5.0	5.3	5.7	6.0	6.3	6.7	7.0	7.3	7.7	8.0	8.3	8.7	9.0	9.3	9.7	10.0
8	3.7	4.0	4.3	4.7	5.0	5.3	5.7	6.0	6.3	6.7	70	7.3	7.7	8.0	8.3	8.7	9.0	9.3	9.7	10.0	
10	4.0	4.3	4.7	5.0	5.3	5.7	6.0	6.3	6.7	7.0	7.3	7.7	8.0	8.3	8.7	9.0	9.3	9.7	10.0		
12	4.3	4.7	5.0	5.3	5.7	6.0	6.3	6.7	7.0	7.3	7.7	8.0	8.3	8.7	9.0	9.3	9.7	10.0			
14	4.7	5.0	5.3	5.7	6.0	6.3	6.7	7.0	7.3	7.7	8.0	8.3	8.7	9.0	9.3	9.7	10.0				
16	5.0	5.3	5.7	6.0	6.3	6.7	7.0	7.3	7.7	8.0	8.3	8.7	9.0	9.3	9.7	10.0					
18	5.3	5.7	6.0	6.3	6.7	7.0	7.3	7.7	8.0	8.3	8.7	9.0	9.3	9.7	10.0						
20	5.7	6.0	6.3	6.7	7.0	7.3	7.7	8.0	8.3	8.7	9.0	9.3	9.7	10.0							
22	6.0	6.3	6.7	7.0	7.3	7.7	8.0	8.3	8.7	9.0	9.3	9.7	10.0								
24	6.3	6.7	7.0	7.3	7.7	8.0	8.3	8.7	9.0	9.3	9.7	10.0									
26	6.7	7.0	7.3	7.7	8.0	8.3	8.7	9.0	9.3	9.7	10.0										
28	7.0	7.3	7.7	8.0	8.3	8.7	9.0	9.3	9.7	10.0											
30	7.3	7.7	8.0	8.3	8.7	9.0	9.3	9.7	10.0												
32	7.7	8.0	8.3	8.7	9.0	9.3	9.7	10.0													
34	8.0	8.3	8.7	9.0	9.3	9.7	10.0														
36	8.3	8.7	9.0	9.3	9.7	10.0															
38	8.7	9.0	9.3	9.7	10.0																
40	9.0	9.3	9.7	10.0																	
42	9.3	9.7	10.0																		
44	9.7	10.0																			
46	10.0																				

NOTE: This table assumes the total stretch-out (add-on) dimension is 16". If the process used results in a different stretch-out (add-on) dimension, this table must be modified accordingly.

BOARD UTILIZATION, ONE PIECE DUCT, 51mm DUCT BOARD, m² PER LINEAL METER OF DUCT

DUCT WIDTH mm	DUCT HEIGHT, mm 150	200	250	300	350	400	450	500	550	600	650	700	750	800	850	900	950	1000	1050	1100	1150
150	1.01	1.11	1.21	1.31	1.41	1.51	1.61	1.71	1.81	1.91	2.01	2.11	2.21	2.31	2.41	2.51	2.61	2.71	2.81	2.91	3.01
200	1.11	1.21	1.31	1.41	1.51	1.61	1.71	1.81	1.91	2.01	2.11	2.21	2.31	2.41	2.51	2.61	2.71	2.81	2.91	3.01	
250	1.21	1.31	1.41	1.51	1.61	1.71	1.81	1.91	2.01	2.11	2.21	2.31	2.41	2.51	2.61	2.71	2.81	2.91	3.01		
300	1.31	1.41	1.51	1.61	1.71	1.81	1.91	2.01	2.11	2.21	2.31	2.41	2.51	2.61	2.71	2.81	2.91	3.01			
350	1.41	1.51	1.61	1.71	1.81	1.91	2.01	2.11	2.21	2.31	2.41	2.51	2.61	2.71	2.81	2.91	3.01				
400	1.51	1.61	1.71	1.81	1.91	2.01	2.11	2.21	2.31	2.41	2.51	2.61	2.71	2.81	2.91	3.01					
450	1.61	1.71	1.81	1.91	2.01	2.11	2.21	2.31	2.41	2.51	2.61	2.71	2.81	2.91	3.01						
500	1.71	1.81	1.91	2.01	2.11	2.21	2.31	2.41	2.51	2.61	2.71	2.81	2.91	3.01							
550	1.81	1.91	2.01	2.11	2.21	2.31	2.41	2.51	2.61	2.71	2.81	2.91	3.01								
600	1.91	2.01	2.11	2.21	2.31	2.41	2.51	2.61	2.71	2.81	2.91	3.01									
650	2.01	2.11	2.21	2.31	2.41	2.51	2.61	2.71	2.81	2.91	3.01										
700	2.11	2.21	2.31	2.41	2.51	2.61	2.71	2.81	2.91	3.01											
750	2.21	2.31	2.41	2.51	2.61	2.71	2.81	2.91	3.01												
800	2.31	2.41	2.51	2.61	2.71	2.81	2.91	3.01													
850	2.41	2.51	2.61	2.71	2.81	2.91	3.01														
900	2.51	2.61	2.71	2.81	2.91	3.01															
950	2.61	2.71	2.81	2.91	3.01																
1000	2.71	2.81	2.91	3.01																	
1050	2.81	2.91	3.01																		
1100	2.91	3.01																			
1150	3.01																				

NOTE: This table assumes the total stretch-out (add-on) dimension is 406mm. If the process used results in a different stretch-out (add-on) dimension, this table must be modified accordingly.

FABRICATION OF DUCT MODULE

1. Cut shiplaps and corner grooves with hand tools or by machine as shown on pages 2-10 through 2-13. Remove groove scrap. Lifting board as shown will make it easier to remove shiplap groove scrap.

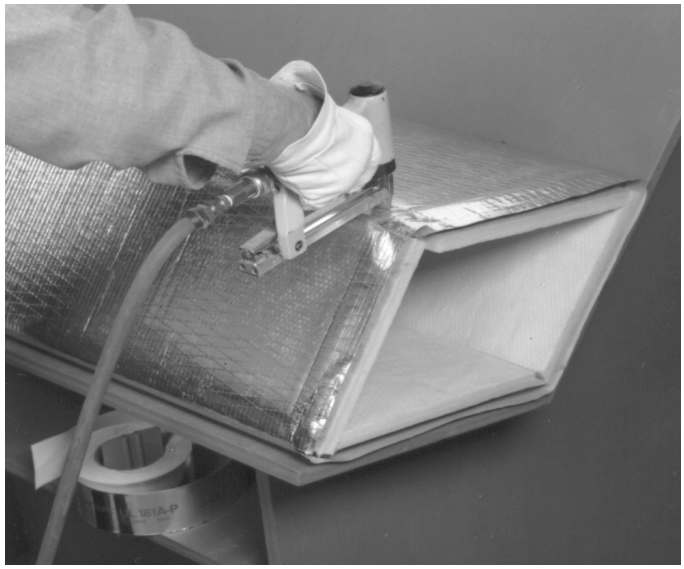

3. While holding the duct canted over at or about 30˚, staple the longitudinal flap with 1/2" (minimum) outward clinching staples approximately 2" (51mm) on centers. For stapling details, see Section IV, CLOSURE.

2. Fold to form the duct section, making sure ends are flush and seated properly in the shoulder of the shiplap edge.

4. Complete the longitudinal seam according to procedures shown in Section IV, CLOSURE, page depending on the approved closure method chosen. (Pressure-sensitive tape shown above.) 3" tape is recommended for 1 1/2" and required for 2" board. Board must be clean and dry.

JOINING TWO DUCT MODULES

1. Slit facing flaps back at corners, making sure you do not cut below the male shiplap shoulder or into inside duct surfaces.

3. Staple flaps on four sided with 1/2" (minimum) outward clinching staples approximately 2" (51mm) on centers. For stapling details see Section IV, CLOSURE.

2. Push the two modules together. Make sure male and female shiplaps are tightly fitted together.

4. Complete the longitudinal seam according to procedures shown in Section IV, CLOSURE, page depending on the approved closure method chosen. (Pressure-sensitive tape shown above.) 3" tape is recommended for 1 1/2" and required for 2" board. Board must be clean and dry.

SECTION III

FABRICATION OF FITTINGS FROM MODULES OR FLAT BOARD

NOTES TO SECTION III

1. FASTENER SCHEDULE:
#10 plated sheet metal screws, board thickness + $^1/_4$" (6mm), with $2^1/_2$" (64mm) square or 3" (76mm) round galvanized steel washers, 0.028" (0.7mm) thick, volcano type, with turned edges facing away from duct board, 12" (305mm) nominal centers, EXCEPT as noted in SECTION V, REINFORCEMENT.

2. TAPE TAB SCHEDULE:
UL 181A pressure sensitive or heat activated tape, 8" (203mm) nominal length, on 12" (305mm) nominal centers, at least one per side. Refer to Section IV, CLOSURE.

3. REINFORCEMENT:
Some fittings may require reinforcement even though schedules for straight ducts of the same span show reinforcement is not required. Refer to Section V, REINFORCEMENT.

4. SHIPLAP ORIENTATION:
Male shiplap ends of duct modules and fittings should face TOWARD the equipment. Female shiplap ends should face AWAY from the equipment.

5. TURNING VANES:
Metal turning vane and runner assembilies shall be fabricated in accordance with the HVACDCS requirements. Runners shall be fastened, two minimum, to the duct wall at 12 in. (305 mm) maximum intervals.

90° ELBOW WITH RAIL MOUNTED METAL TURNING VANES FROM MODULE

1. Cut on dashed lines A - B and A' - B' with straight knife: through facing only along duct corners. Cut on dashed line A - A' through board and facing across square edge tap-out panel. See Fig. 3-2A and 3-2B.

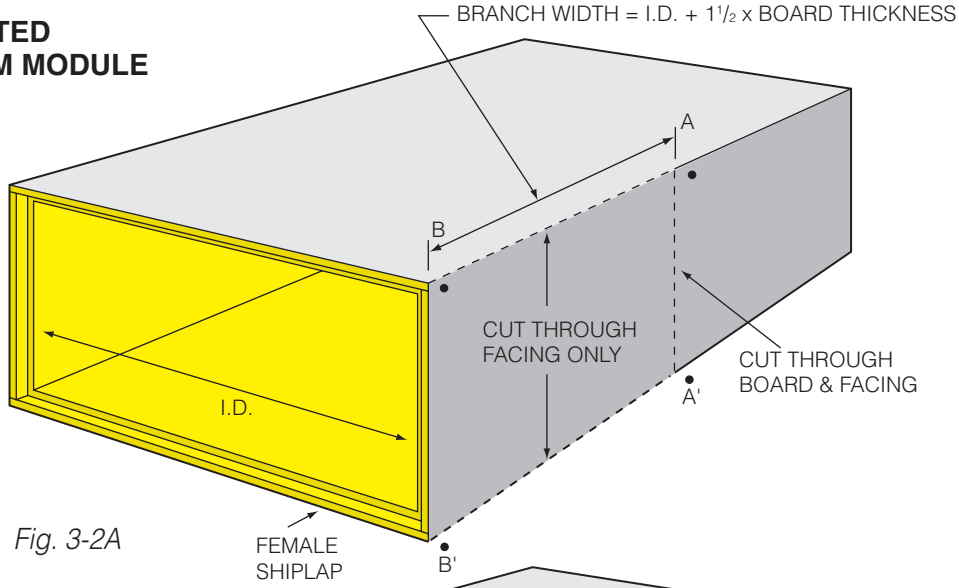

Fig. 3-2A

2. Install turning vanes per Fastener Schedule, Page 3-1, minimum 2 per rail. Metal turning vane and runner assembilies shall be fabricated in accordance with the HVACDCS requirements. Runners shall be fastened, two minimum, to the duct wall at 12 in. (305 mm) maximum intervals.

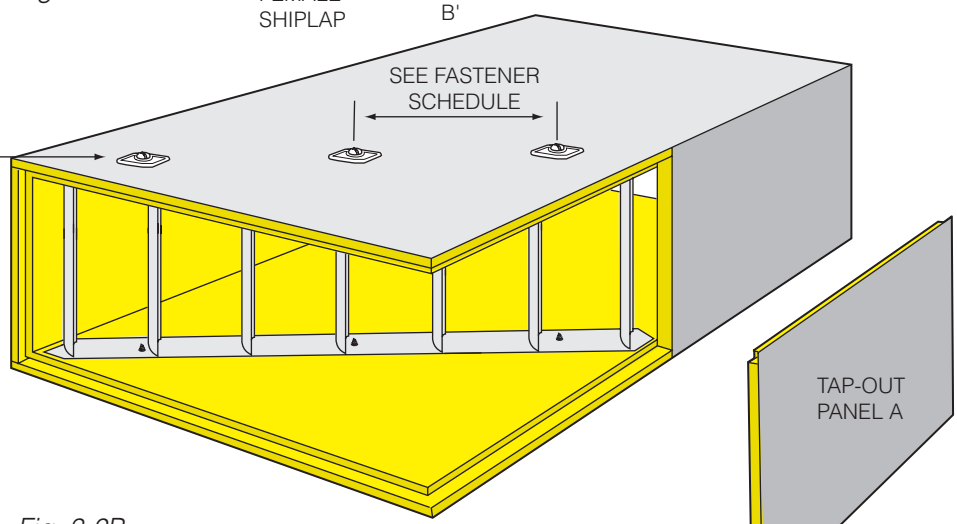

Fig. 3-2B

3. Rotate tap-out panel A and place in end of elbow so female shiplap faces away from equipment. See Fig. 3-2C.

4. Apply tape tabs per Tape Tab Schedule, Page 3-1

5. Apply closure to all circumferential joints. See Section IV CLOSURE.

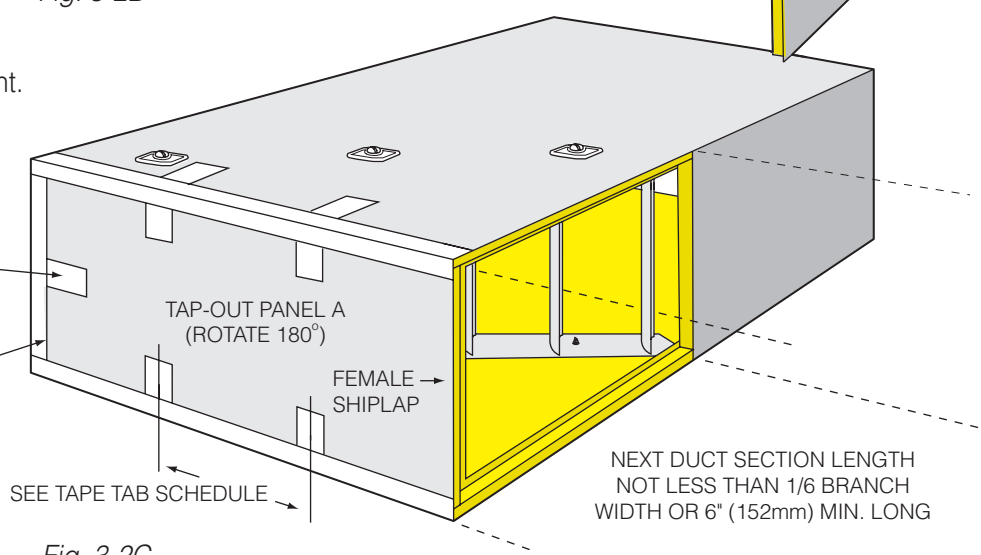

Fig. 3-2C

90° ELBOW WITH TURNING VANES FROM FLAT GROOVED DUCT BOARD

Turning vanes may be fibrous glass or metal. Metal vanes must be rail mounted. Fibrous glass vanes may be installed as shown in Figs. 3-3B and 3-3C.

1. Cut tap-out panel A from board with straight knife (Fig. 3-3B).

2. Draw diagonal lines A - B and A' - B' for turning vane placement (Fig. 3-3A).

3. Cut vane sockets, approx. 3" (76mm) spacing along diagonal lines, first vane at edge of panel, using vane socket cutter. Socket depth shall not exceed $^3/_4$" (19mm) in depth. Remove loose insulation.

4. Cut turning vane stock to inside duct height plus $1^1/_2$" (38mm) to $1^3/_4$" (44mm) and insert in sockets in bottom of panel (Fig.3-3C). Orient vanes to direct air parallel to axis of next duct section. Install per turning vane manufacturer recommendations.

5. Close fitting and staple longitudinal seam (Fig. 3-3C).

6. Rotate tap-out panel A and place in end of duct section so female shiplap faces away from equipment (Fig. 3-3D).

7. Apply tape tabs per Tape Tab Schedule, Page 3-1.

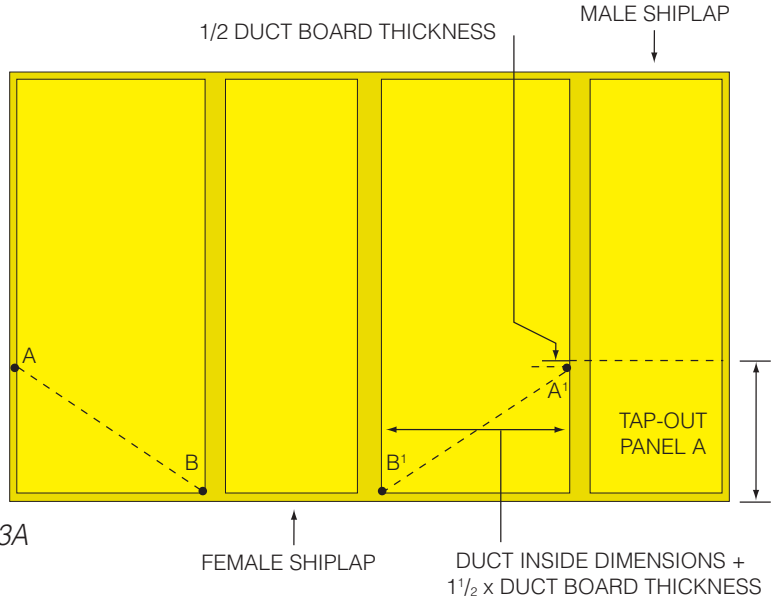

Fig. 3-3A

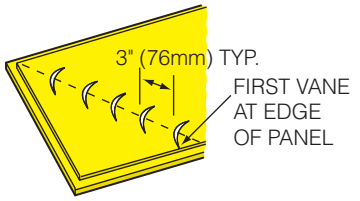

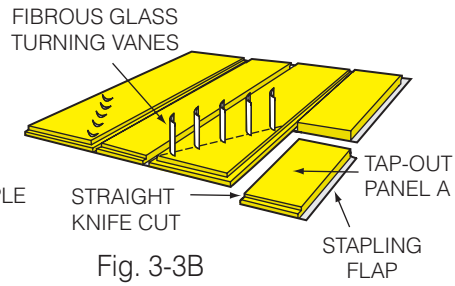

Fig. 3-3B

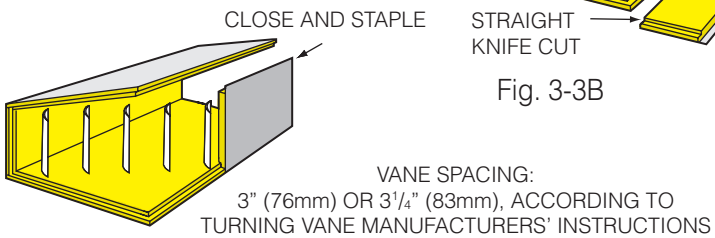

Fig. 3-3C

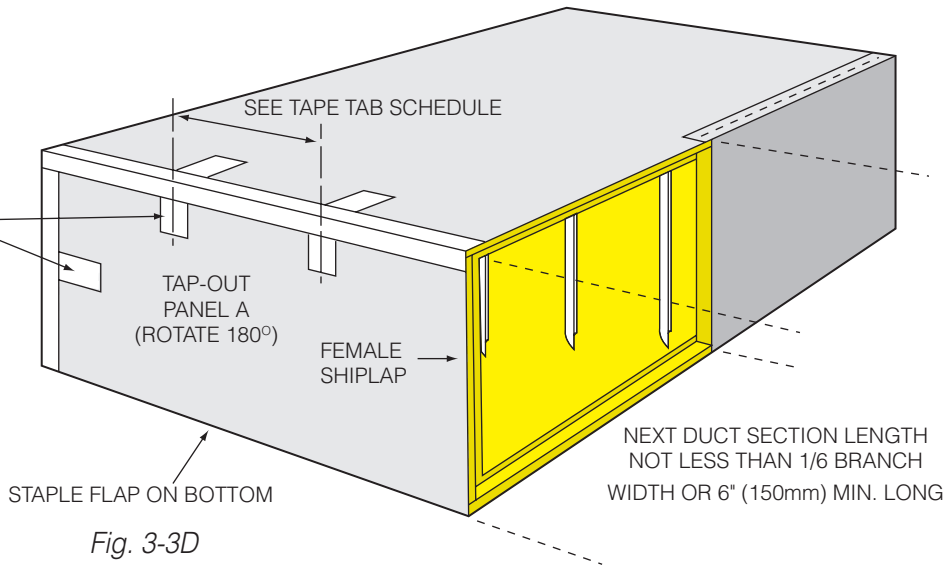

Fig. 3-3D

THREE PIECE 90° ELBOW FROM DUCT BOARD MODULE

1. Make straight knife cuts along dashed lines A - B - C - D - A and A' - B' - C' - D' - A' (Fig. 3-4A). Maintain cheek panel angle when making side panel cuts.

OPTIONAL: CHEEK PANELS ONLY: Make cuts with shiplap tool, lines A-B and A'-B', C-D and C'-D'. Maintain shiplap orientation of original duct section.

2. Separate three pieces (Fig. 3-4B). Rotate center piece 180° (Fig. 3-4C). Push three pieces together (Fig. 3-4D).

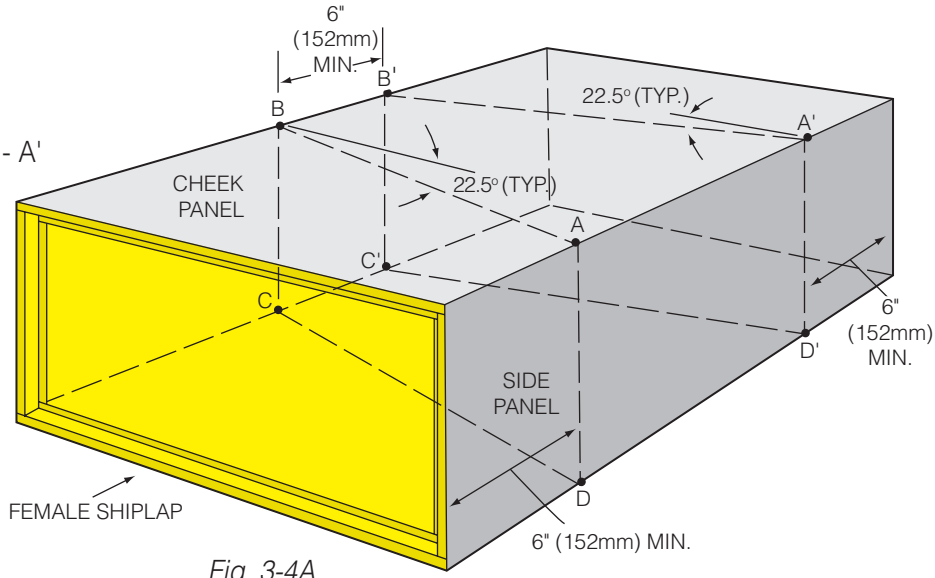

Fig. 3-4A

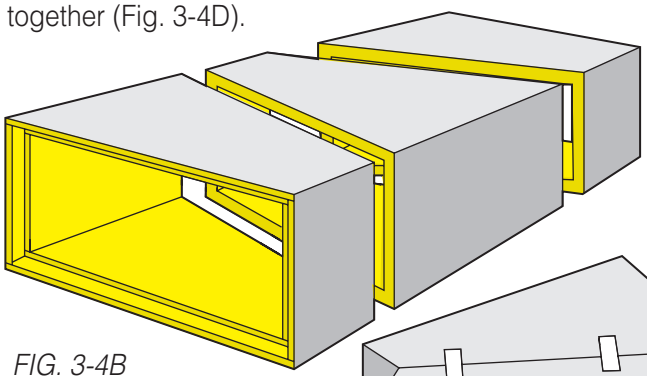

FIG. 3-4B

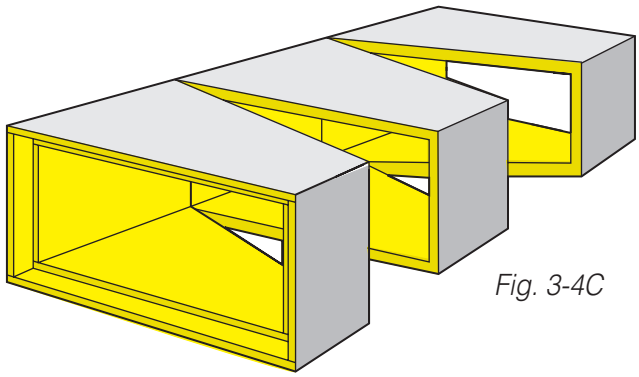

Fig. 3-4C

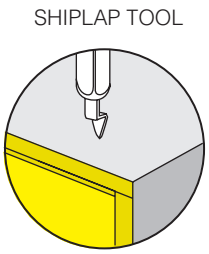

FIG. 3-4D

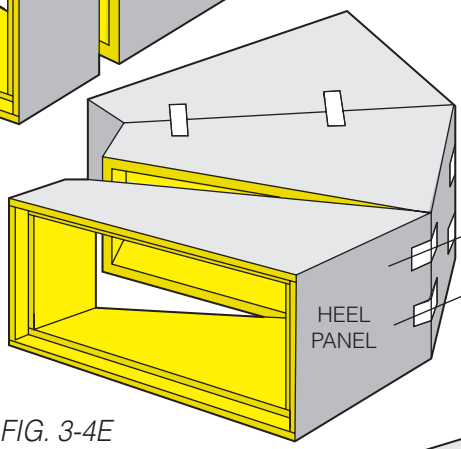

FIG. 3-4E

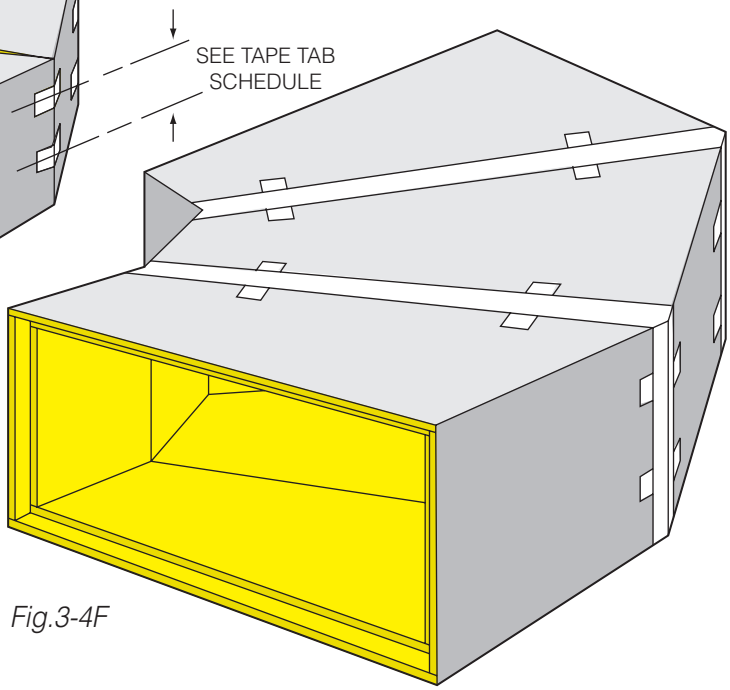

Fig.3-4F

3. Apply tape tabs per Tape Tab Schedule, Page 3-1, starting with heel panels (Fig. 3-4E).

4. Apply closure to all circumferential joints (Fig. 3-4F). See Section IV, CLOSURE.

Note: Turning vanes are not required.

ELBOWS OF LESS THAN 90° FROM DUCT BOARD MODULE

1. Make straight knife cut around duct section, dashed line A - B - C - D - A, maintaining cheek panel angle when making side panel cuts. See Fig. 3-5B.

OPTIONAL, CHEEK PANELS ONLY:
Score facing with knife and cut along lines A - B and C - D with shiplap tool. Maintain shiplap orientation. See Fig. 3-5C.

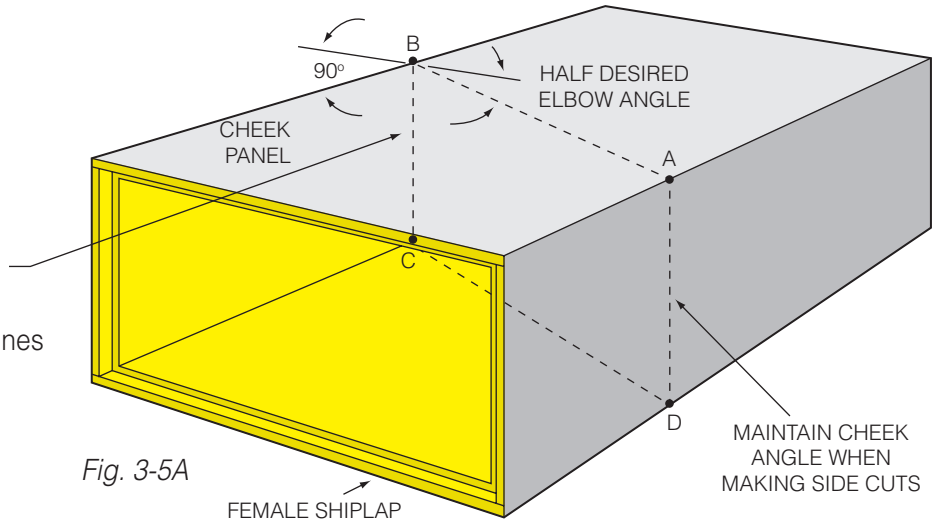

Fig. 3-5A

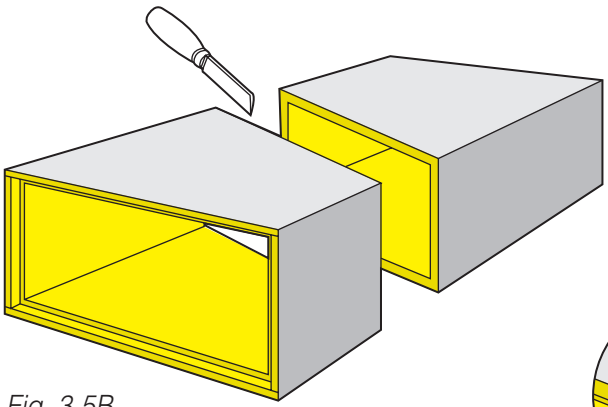

Fig. 3-5B

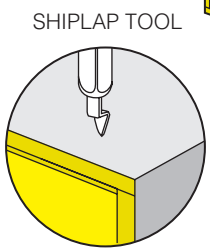

Fig.3-5C

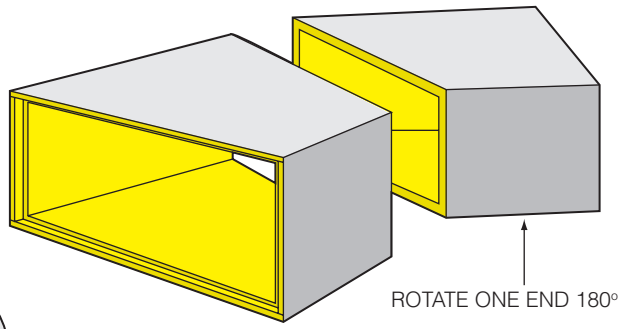

Fig.3-5D

2. Separate two pieces (Fig. 3-5B). Rotate one piece 180° (Fig. 3-5D). Push pieces together (Fig. 3-5E).

3. Apply tape tabs per Tape Tab Schedule, Page 3-1, starting with cheek panels.

4. Apply closure to circumferential joint (Fig. 3-5E). See Section IV, CLOSURE.

Note: Turning vanes are not required.

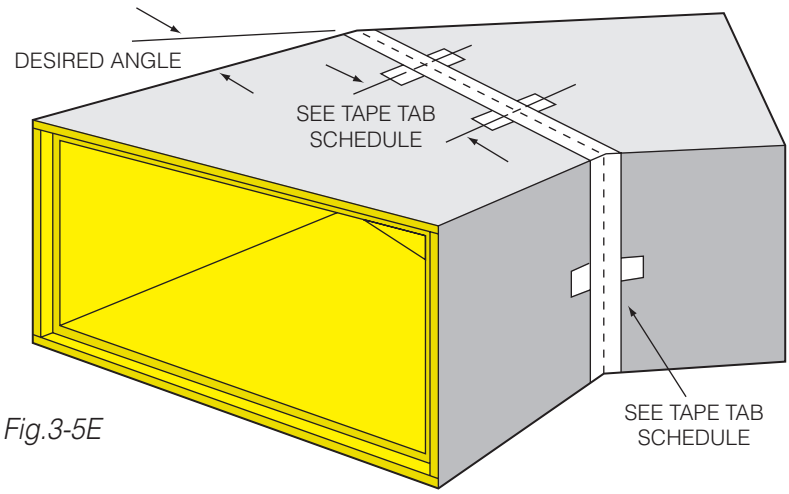

Fig.3-5E

TEE FROM DUCT BOARD MODULE WITH RAIL MOUNTED METAL TURNING VANES

1. Cut with straight knife on dashed lines A - B and A' - B', all four corners, through facing only (See Fig. 3-6A).

2. Cut on dotted lines A - A', both square edge tap-out panels, with straight knife, through board and facing (see Fig. 3-6A). Discard tap-out panels (Fig. 3-6B).

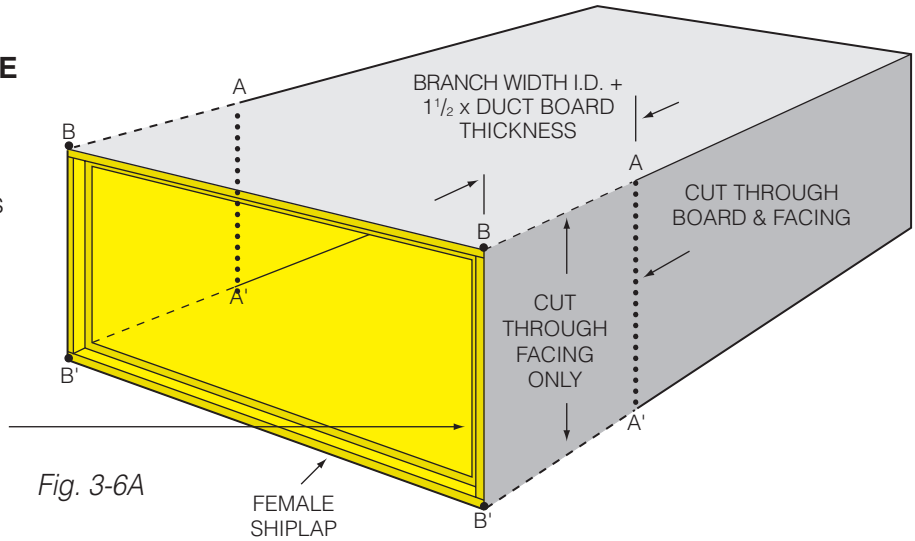

Fig. 3-6A

3. Install turning vanes. See Fig. 3-6B and Fastener Schedule, Page 3-1, minimum 2 per rail.

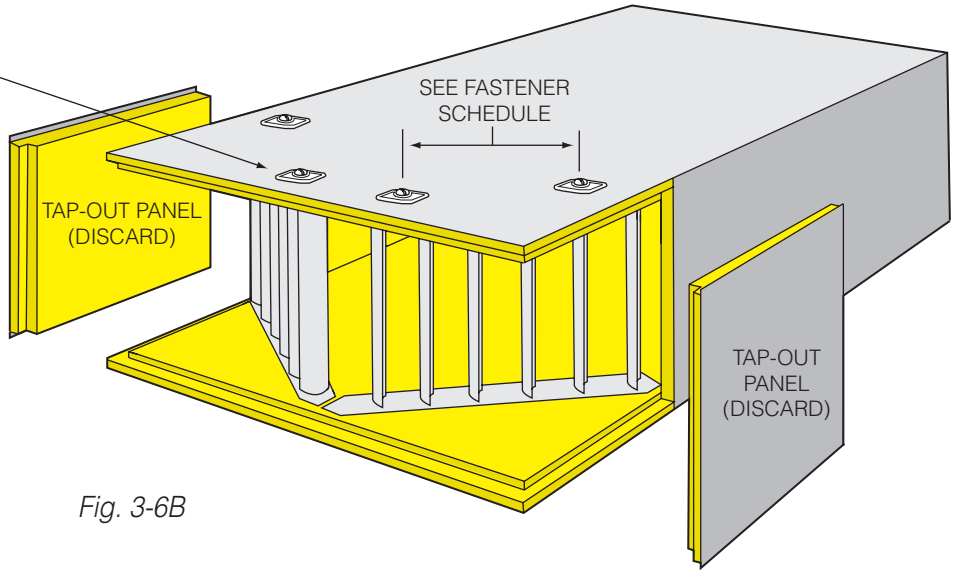

Fig. 3-6B

4. Fabricate end cap with two female shiplaps to close fitting (Fig. 3-6C). Apply tape tabs per Tape Tab Schedule, Page 3-1.

5. Apply closure to circumferential joints (Fig. 3-6C). See Section IV, CLOSURE.

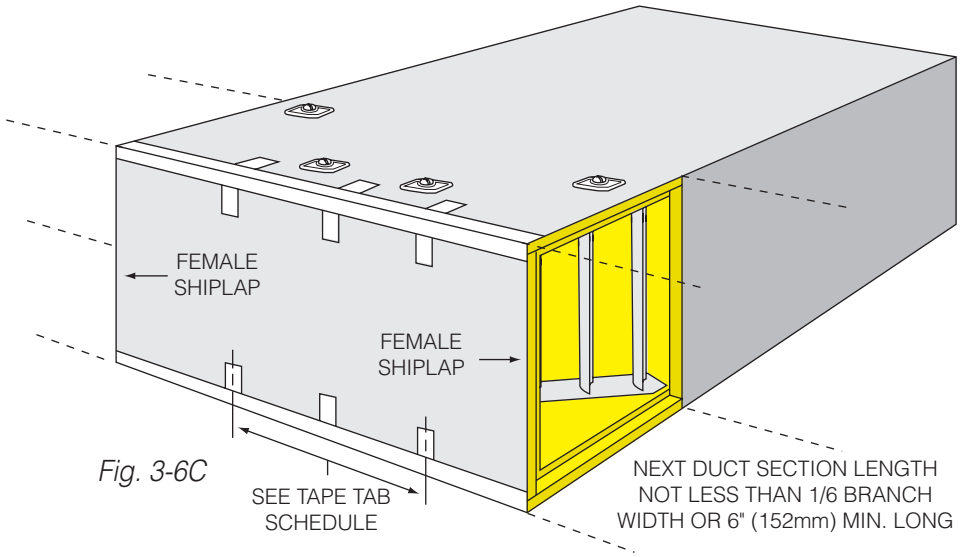

Fig. 3-6C

TEE FROM FLAT DUCT BOARD WITH FIBROUS GLASS TURNING VANES

1. Draw turning vane center lines A - B for one branch, C - B for other. Draw lines D - E and D' - E' for tee openings (see Fig. 3-7A).

2. Cut with straight knife along tee opening lines C - D and C' - D'. Cut with straight knife along shiplap panel edges so tee opening panels with staple flaps can be removed and discarded (Fig. 3-7B).

3. Cut vane sockets on 3" (76mm) spacing (approx.) along lines A - B and A' - B', first vane at edge of panel, using vane socket cutter (Fig. 3-7C). Orient vanes to direct air parallel to axis of each branch. Remove loose insulation from sockets.

4. Cut turning vane stock to inside duct height plus $1^1/_2$" (38mm) to $1^3/_4$" (44mm). Insert in sockets.

5. Close fitting and staple longitudinal seam (Fig. 3-7D).

6. Fabricate end cap with two female shiplaps. Install in end of fitting and apply tape tabs per Tape Tab Schedule, Page 3-1. Close fitting and staple longitudinal seam (Fig. 3-7D).

7. Apply closure to longitudinal seam and circumferential joints. See Section IV, CLOSURE.

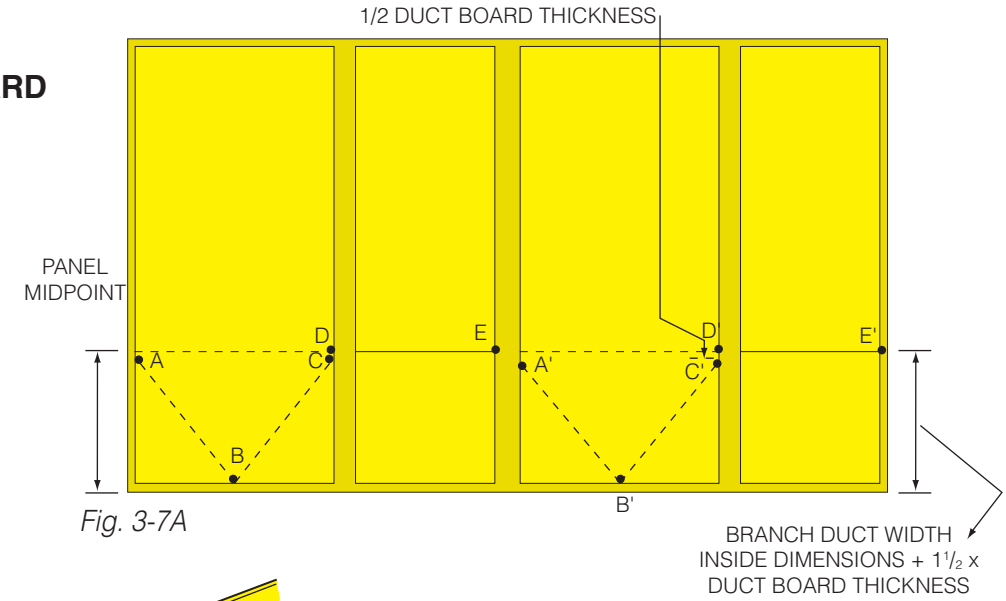

Fig. 3-7A

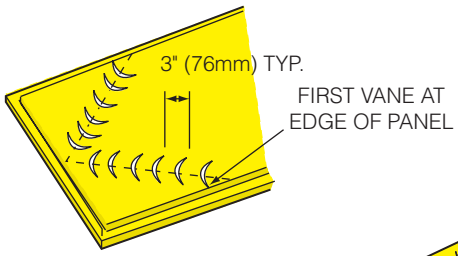

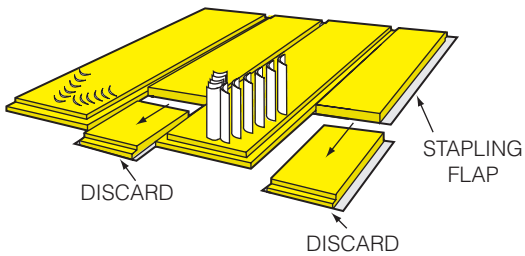

Fig. 3-7B

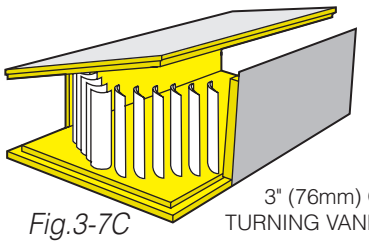

Fig.3-7C

VANE SPACING:
3" (76mm) OR $3^1/_4$" (83mm), ACCORDING TO TURNING VANE MANUFACTURERS' INSTRUCTIONS

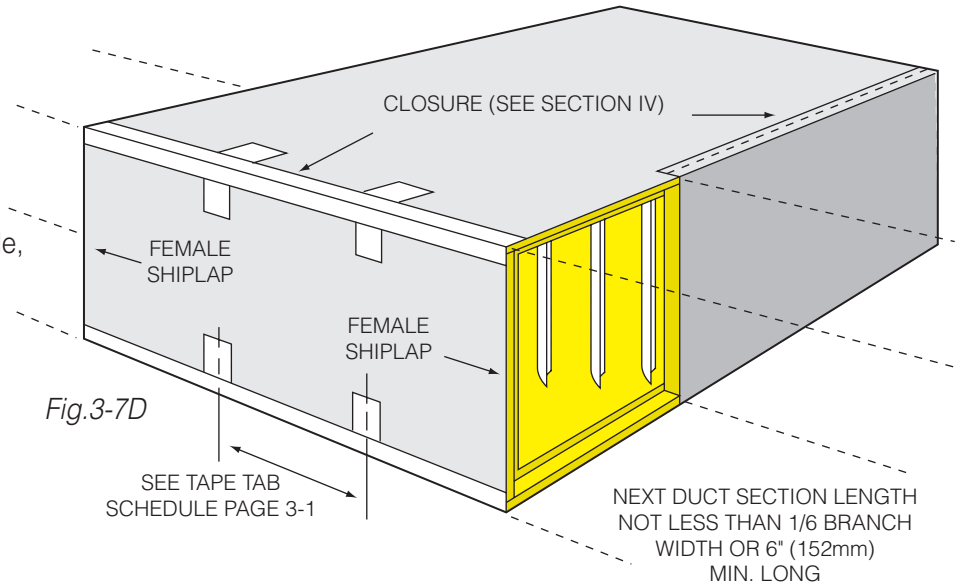

Fig.3-7D

ONE WAY 30° OFFSET FROM DUCT BOARD MODULE

1. Make straight knife cuts along dashed lines A - B - C - D - A and A' - B' - C' - D' - A'.
Maintain 15° cheek panel angle when making side panel cuts. See Fig. 3-8B.

OPTIONAL, CHEEK PANELS ONLY:
Score facing with knife and cut along lines A - B, A' - B', C - D, and C' - D' with shiplap tool.
Maintain the shiplap orientation.
See Figs. 3-8C and 3-8D.

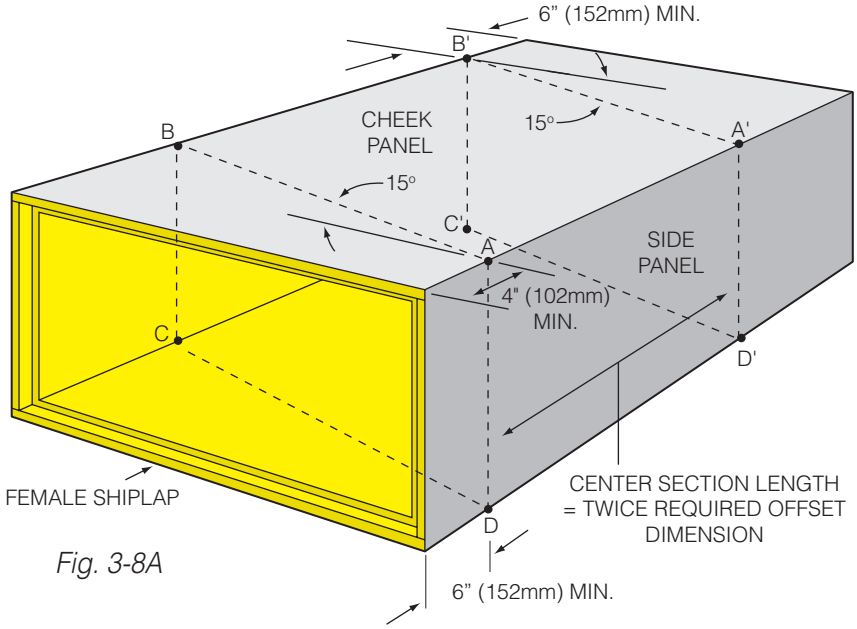

Fig. 3-8A

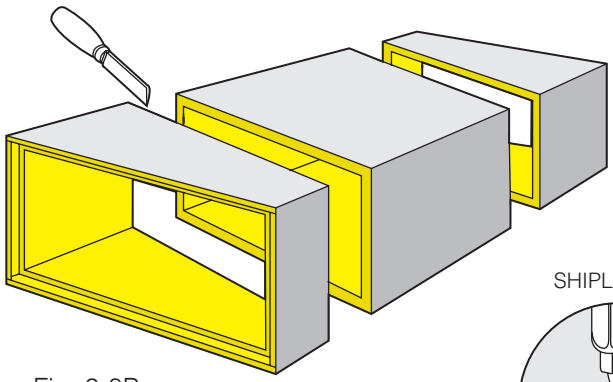

Fig. 3-8B

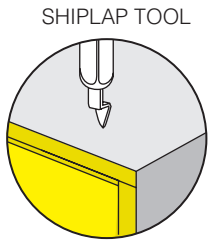

Fig. 3-8C

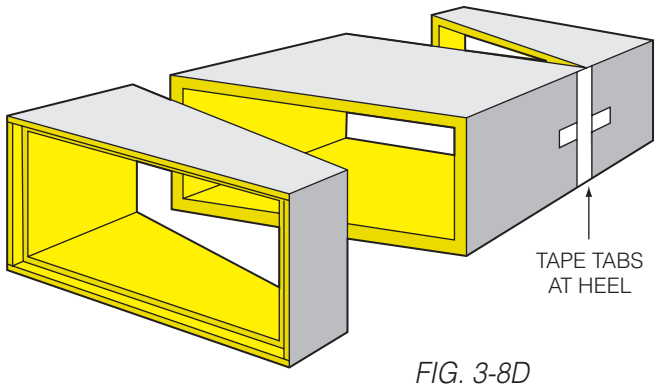

FIG. 3-8D

2. Separate three pieces (Fig. 3-8B).
Rotate center piece 180° (Fig. 3-8D).
Push three pieces together.

3. Apply tape tabs per Tape Tab Schedule, Page 3-1, starting with cheek panels (Fig. 3-8E).

4. Apply closure to circumferential joints (Fig. 3-8E).
See Section IV, CLOSURE.

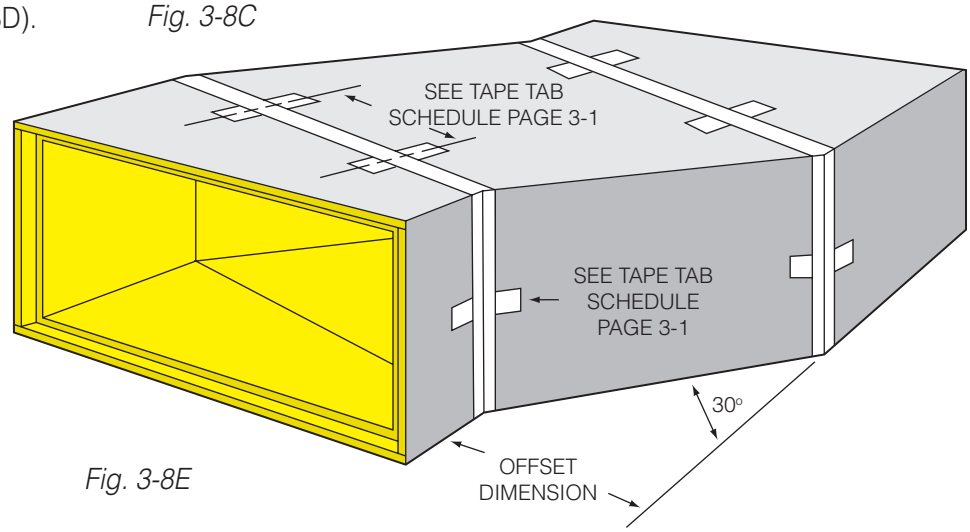

Fig. 3-8E

ONE WAY OFFSET OF ANY ANGLE FROM DUCT BOARD MODULE

Assume field conditions determine starting point A, offset length L, and offset dimension. See Fig. 3-9A.

1.Draw line O - O' parallel to duct edge, offset dimension from edge.

2. Locate point B by measuring distance L (offset length) from point A. Then strike arc using B as center and L as radius. Intersection of arc with line O - O' establishes point A'.

3. Draw line A - A', extending it across cheek panel to point C. Mark point C. Line A - C establishes offset angle.

4. Measure L distance from point C to locate and mark point D. Draw line B - D, extending layout lines around duct section.

5. Make two straight knife cuts around duct section on dashed lines. Extend layout lines square with corner. Maintain cheek panel angle when making side panel cuts. See Figure 3-9B.

OPTIONAL, CHEEK PANELS ONLY:
Score facing with knife and cut along lines A - C and B - D, E - F and G - H with shiplap tool (Fig. 3-9D). Maintain the shiplap orientation.

6. Separate three pieces (Fig. 3-9B). Rotate center section 180° (Fig. 3-9C). Push three pieces together.

7. Apply tape tabs per Tape Tab Schedule, Page 3-1, starting with heel panels (Fig. 3-9C).

8. Apply closure to circumferential joints (Fig. 3-9E). See Section IV, CLOSURE.

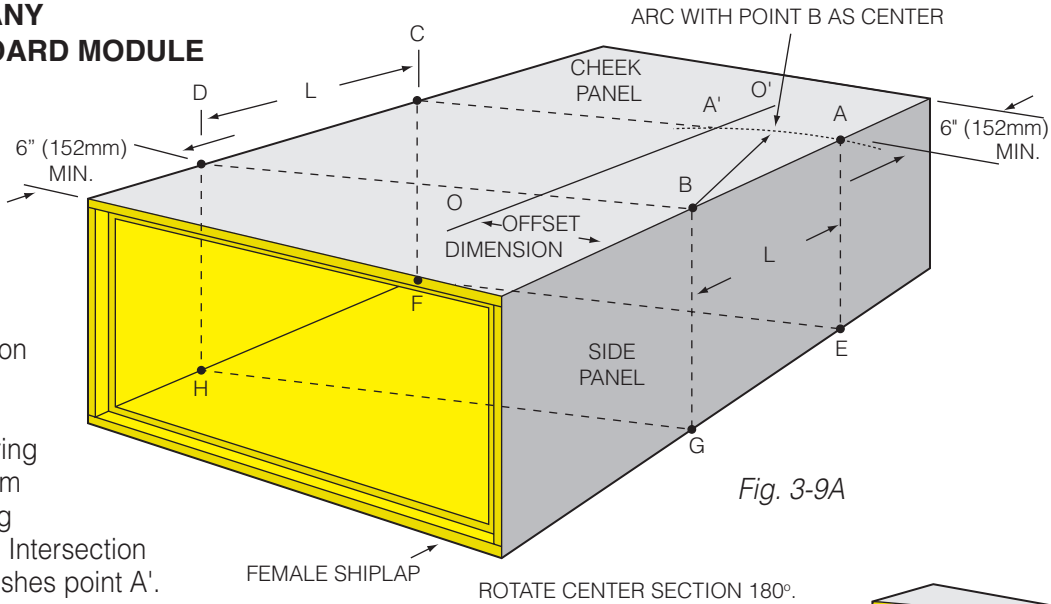

Fig. 3-9A

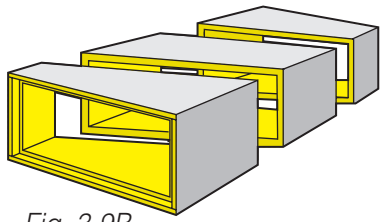

Fig. 3-9B

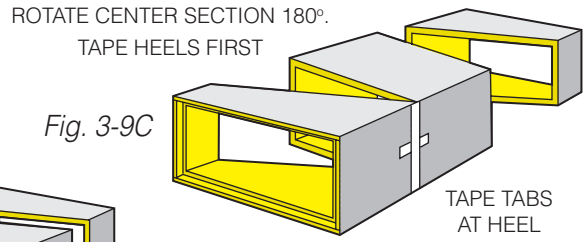

Fig. 3-9C

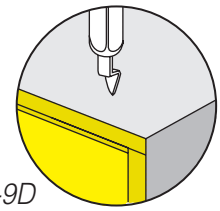

Fig. 3-9D

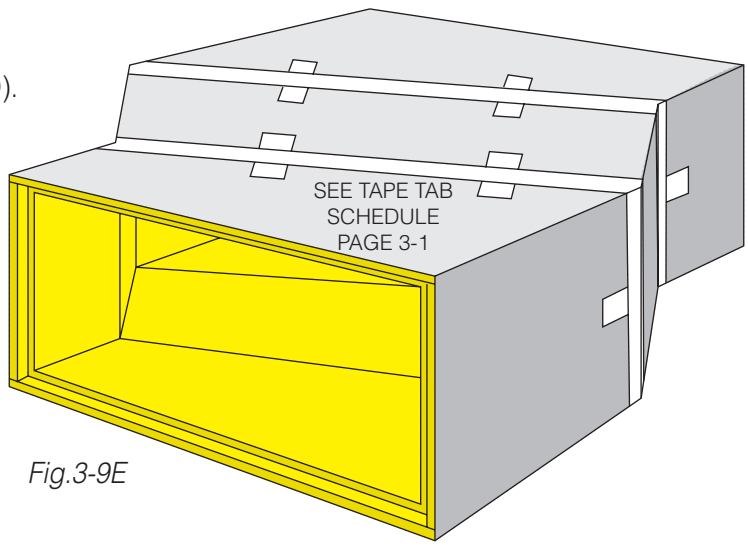

Fig.3-9E

ONE WAY TRANSITION FROM DUCT BOARD MODULE, REDUCING SQUARE EDGE PANEL

Change dimension = difference between height of male and female shiplap ends. If shiplap and square edge panels are reversed, follow instructions on page 3-11.

1. Make straight knife cut through insulation and facing along dashed lines A - B and A' - B' (Fig. 3-10A).

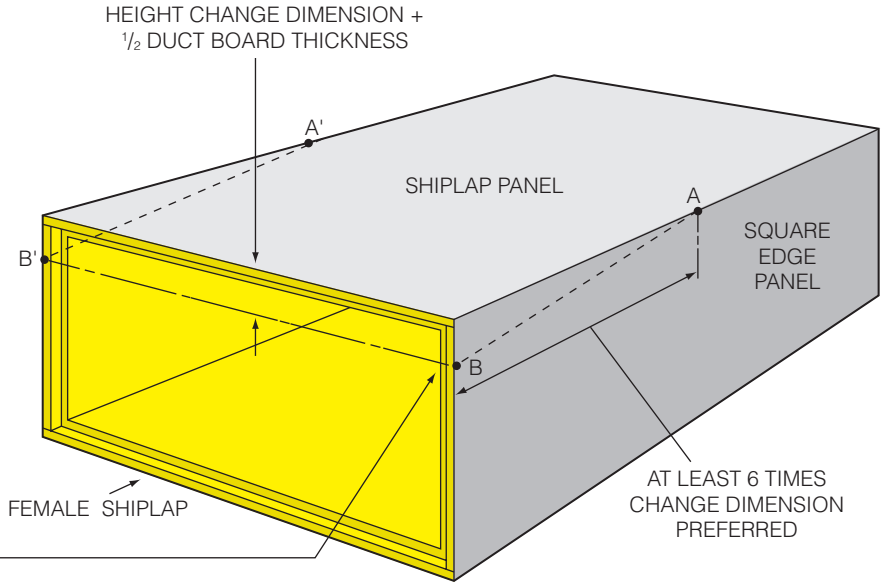

Fig. 3-10A

2. Remove and discard triangular scrap. Trim facing on both sides leaving 2" (51mm) (approx.) staple flaps (Fig. 3-10B).

3. Make relief cut inside duct if required for panel to conform to transition angle.

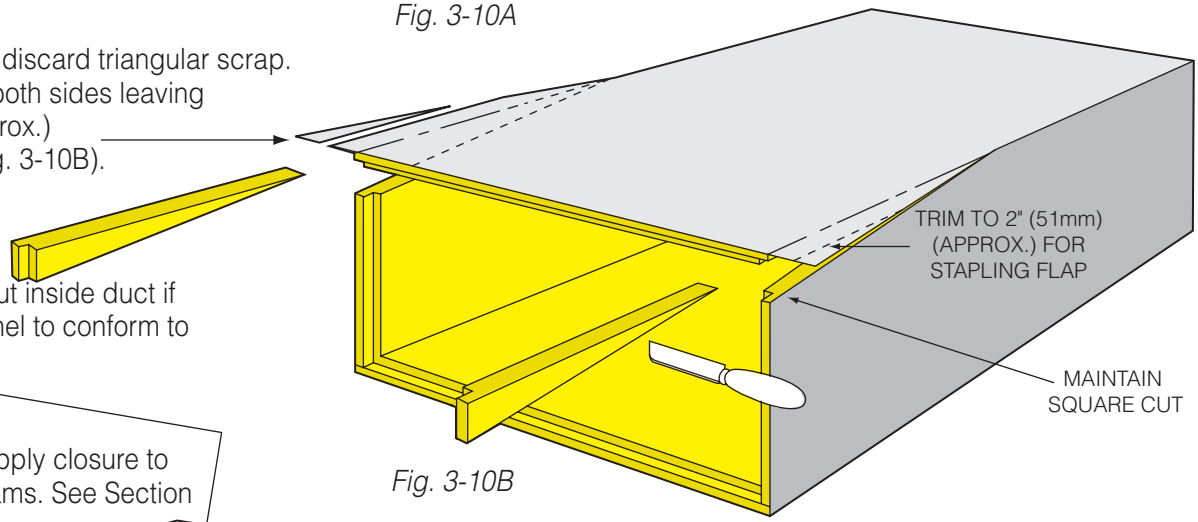

Fig. 3-10B

4. Staple and apply closure to longitudinal seams. See Section IV, CLOSURE.

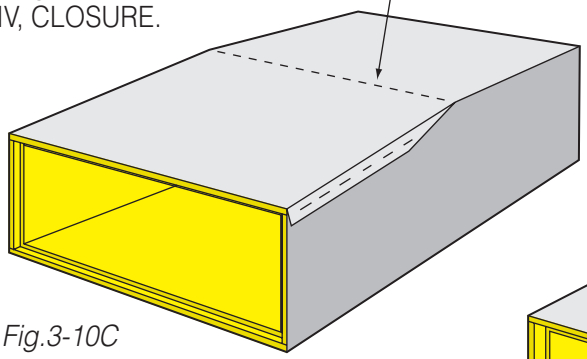

Fig.3-10C

NOTE: If sloping panel is short of end by more than $^3/_8$" (10mm), insert shiplapped panel 6" (152mm) (min.) long at end of sloping panel, OR halve slope angle by using focal transition (see page 3-14).

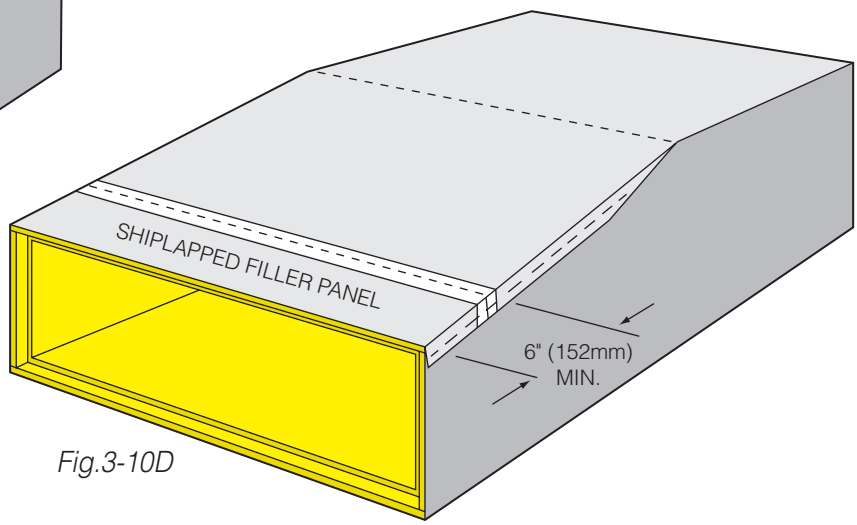

Fig.3-10D

ONE WAY TRANSITION FROM DUCT BOARD MODULE REDUCING SHIPLAP PANEL

Change dimension = difference between width of male and female shiplap ends. If shiplap and square edge panels are reversed, follow instructions on page 3-10.

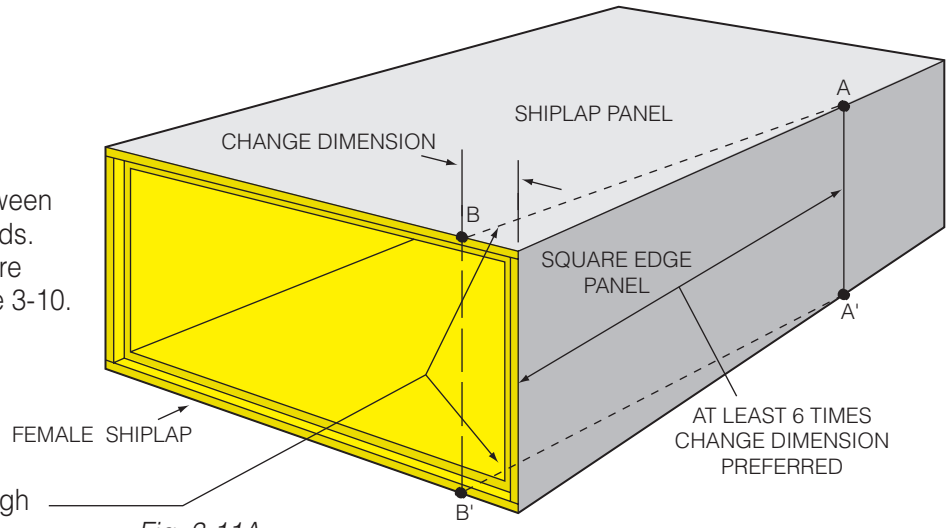

Fig. 3-11A

1. Use hand shiplap tool to cut through insulation and facing along dashed lines A - B and A' - B' (Fig. 3-11A). Maintain shiplap orientation of original module (Fig. 3-11B).

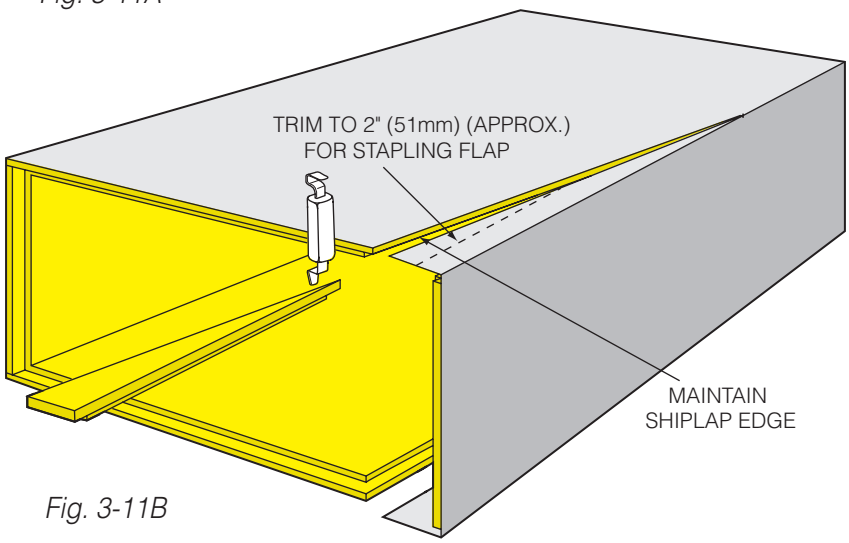

Fig. 3-11B

2. Remove and discard triangular scrap. Trim facing both sides leaving 2" (51mm) (approx.) staple flaps (Fig. 3-11B).

3. Make relief cut inside duct if required for panel to conform to transition angle.

4. Staple and apply closure to longitudinal seams. See Section IV, CLOSURE.

NOTE: If sloping panel is short of end by more than $^3/_8$" (10mm), insert shiplapped panel 6" (151mm) (min.) long at end of sloping panel, OR halve slope angle by using focal transition (see page 3-14).

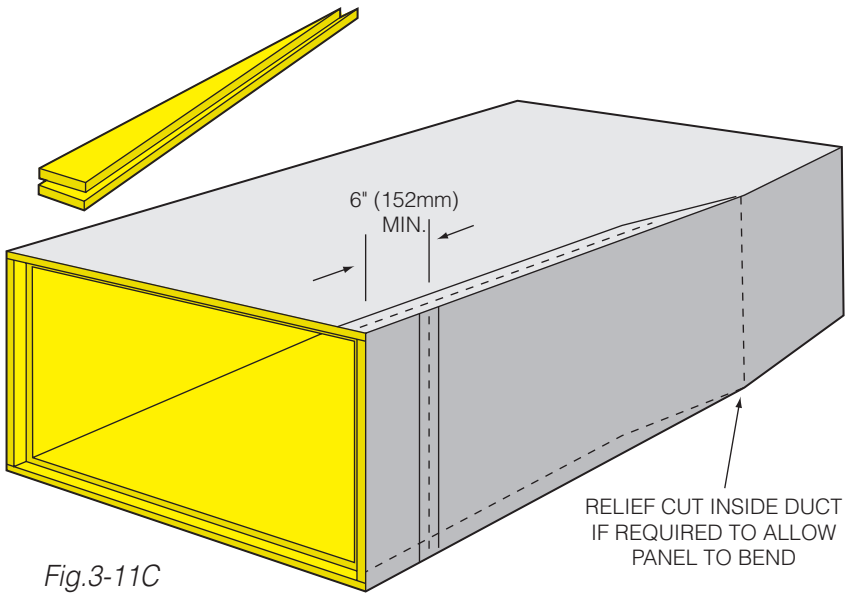

Fig.3-11C

TWO WAY TRANSITION FROM DUCT BOARD MODULE REDUCING SHIPLAP AND SQUARE EDGE PANELS

Width change dimension = difference between width of male and female shiplap ends.

Height change dimension = difference between height of male and female ends.

1. Use hand shiplap tool to cut through insulation and facing along dashed lines A - B and A' - B' on shiplapped panels (Fig. 3-12A). Maintain shiplap orientation of original module (Fig. 3-12B).

2. Fold back facing and make straight knife cuts through insulation along dotted lines A - C and D - C' on square edge panels (Fig. 3-12B).

3. Remove and discard triangular scrap. Trim facing both sides leaving 2" (51mm) (approx.) staple flaps.

4. Make relief cut inside duct if required for panels to conform to transition angles.

5. Staple and apply closure to longitudinal seams. See Section IV, CLOSURE.

NOTE: If sloping panels are short of end by more than $^3/_8$" (10mm), insert shiplapped panels 6" (152mm) (min.) long at ends of sloping panels (see Fig. 3-10D), trim two long panels back to align with foreshortened panel ends*, OR halve slope angle by using focal transition (see page 3-14).

*This must be done correctly so module length will not be shortened.

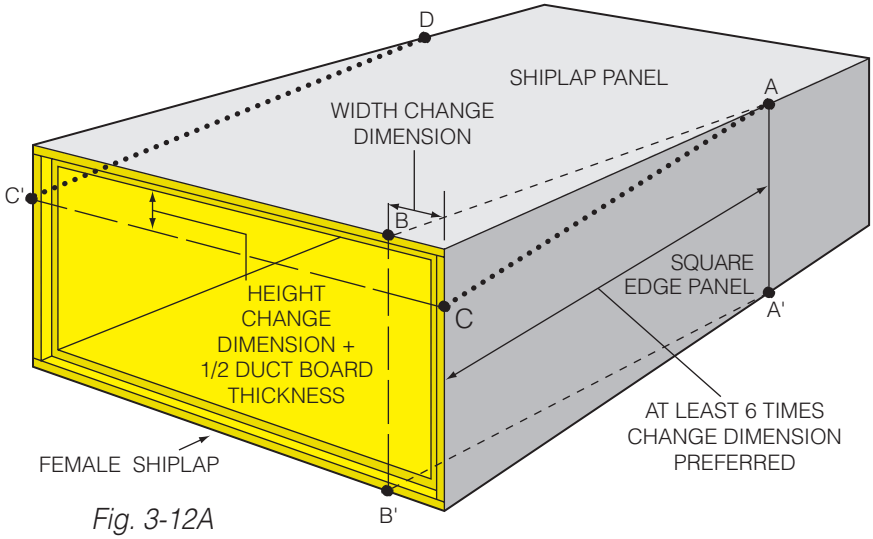

Fig. 3-12A

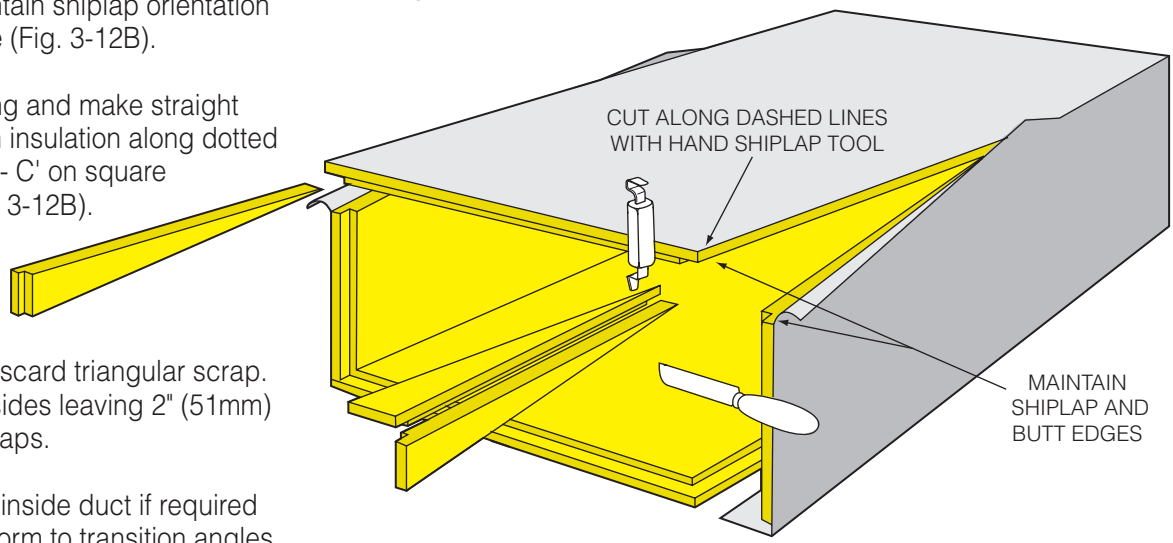

Fig. 3-12B

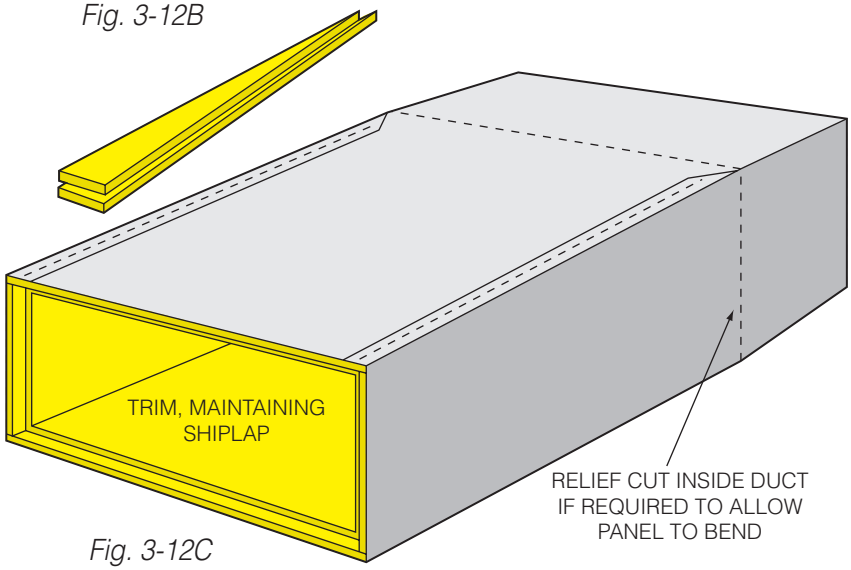

Fig. 3-12C

ONE WAY TRANSITION FROM FLAT GROOVED DUCT BOARD REDUCING SHIPLAP PANEL

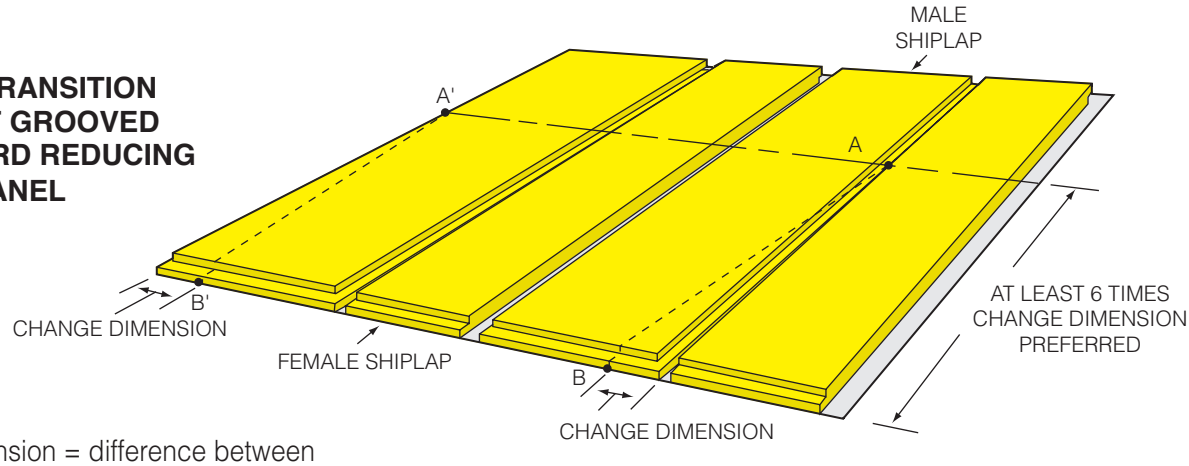

Fig. 3-13A

Change dimension = difference between width of male and female shiplap ends.

1. Draw diagonal lines A - B and A' - B' establishing transition angle (Fig. 3-13A).

2. Make straight knife cut through insulation and facing along diagonal lines A - B and A' - B' (Fig. 3-13B). Remove and discard triangular scrap. Trim facing to 2" (51mm) (approx.) for staple flaps.

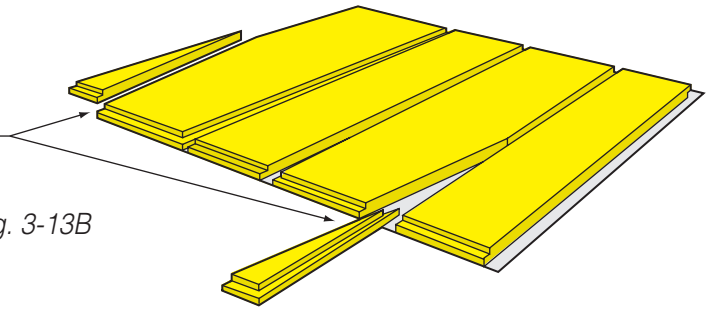

Fig. 3-13B

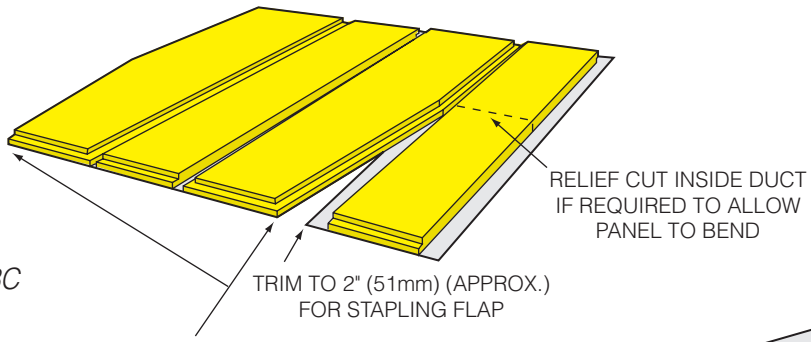

Fig. 3-13C

3. Shiplap diagonal cuts with gray (female) shiplap tool along diagonals (Fig. 3-13C).

4. Make relief cut (Fig. 3-13C) inside duct if required for panel to conform to transition angle.

5. Staple and apply closure to longitudinal seams. See Section IV, CLOSURE.

NOTE: If sloping panel is short of end by more than $^3/_8$" (10mm), insert shiplapped panel 6" (152mm) (min.) long at end of sloping panel (see Fig. 3-10D), OR halve slope angle by using focal transition (see page 3-14).

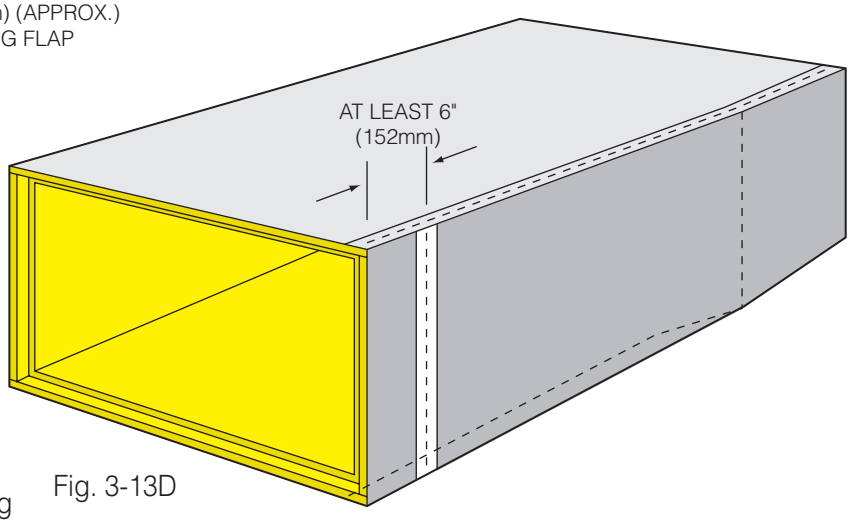

Fig. 3-13D

FOCAL (CENTERLINE) TRANSITIONS

Change dimension = difference between width of male and female ends.

1. Divide change dimension by 2. Draw diagonal lines A - B, A' - B', C - D, and C' - D' to take half the change dimension from each side of module (Fig. 3-14A).

2. Use hand shiplap tool to cut through insulation and facing along dashed lines (Fig 3-14B). Maintain shiplap orientation of original module.

3. Discard triangular scrap. Trim facing both sides leaving 2" (51mm) (approx.) staple flaps.

4. Make relief cut (Fig.3-14B) inside duct if required for panels to conform to transition angles.

5. Staple and apply closure to longitudinal seams. See Section IV, CLOSURE.

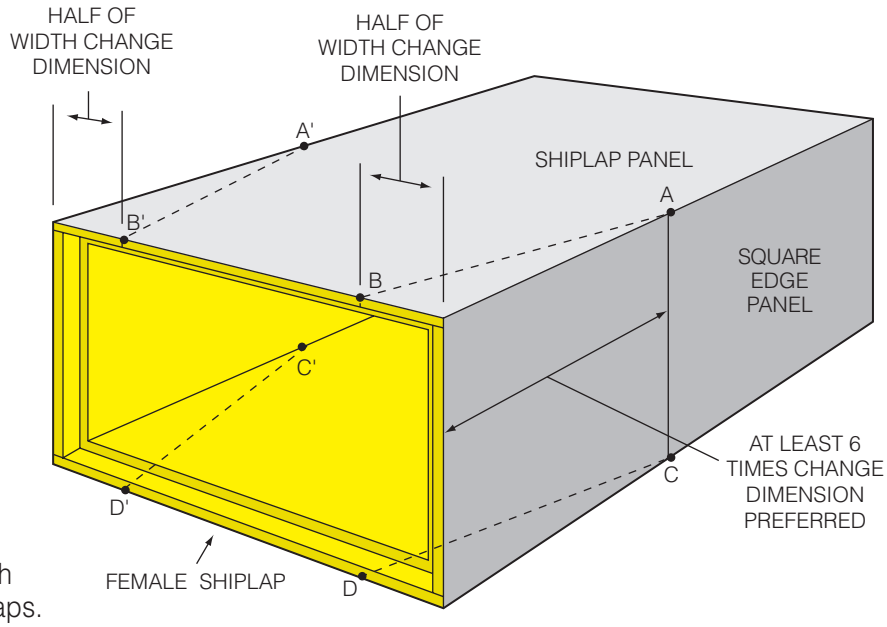

Fig. 3-14A

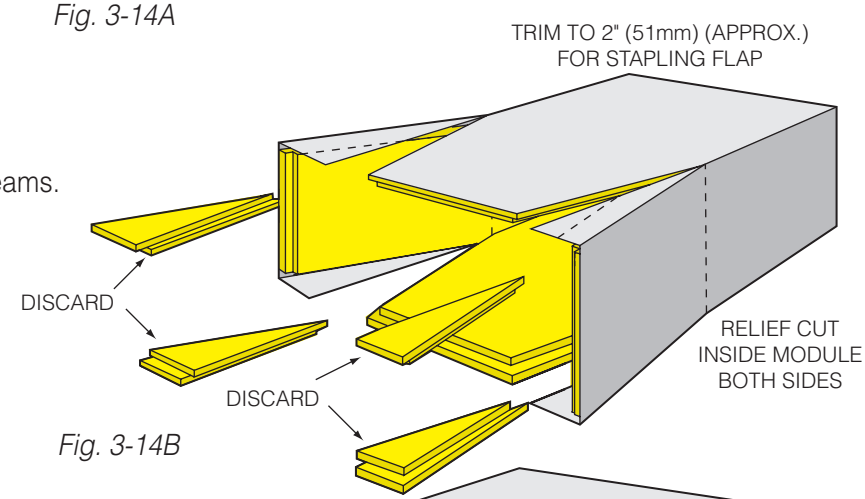

Fig. 3-14B

NOTE:
If both height and width must be changed at each corner, refer to Page 3-12 and take half the height change from both top and bottom of both square edge panels.

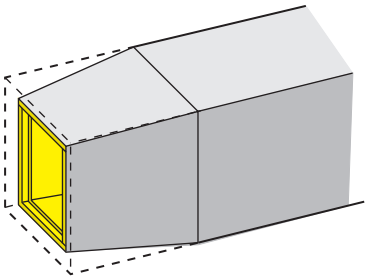

Fig.3-14C

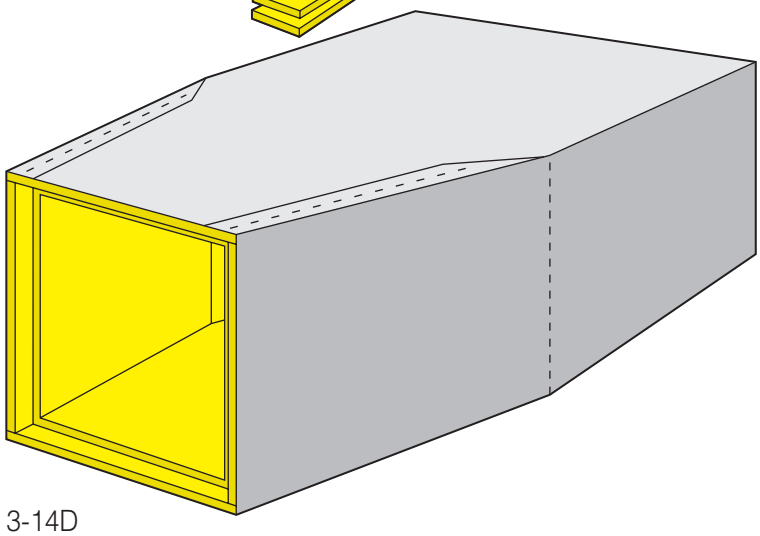

Fig. 3-14D

TRANSITION
CHANGING HEIGHT AND WIDTH FROM ONE PIECE OF FLAT DUCT BOARD

Size is determined by taking the larger of both height and width dimensions.

EXAMPLE:
For transition from 24" x 12" (approx. 610mm x 305mm) to 18" x 18" (approx. 457mm x 457mm), groove duct board for 24" x 18" (approx. 610mm x 457mm).

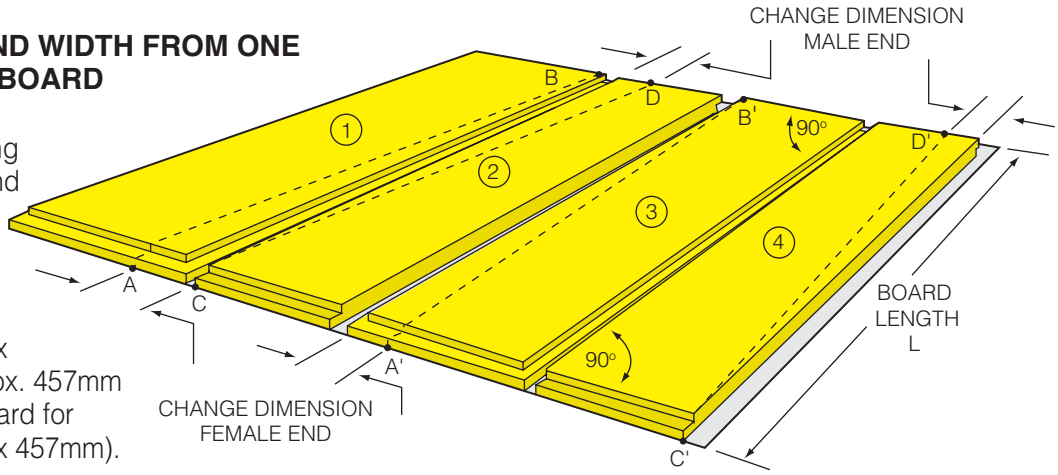

Fig. 3-15A.

1. Layout: Draw lines A-B and A'-B' on shiplap panels ① and ③. Draw lines C-D and C'-D' on square edge panels ② and ④. See Fig. 3-15A.

2. Make straight knife cuts along lines A - B and A' - B' through board and facing on panels ① and ③. Replace female shiplaps. Discard triangular scrap. See Fig. 3-15B.

3. Straight knife cut through insulation only along lines C-D and C'-D'. Remove and discard triangular scrap. Trim facing to provide 2" (51mm) staple flaps. See Fig. 3-15B.

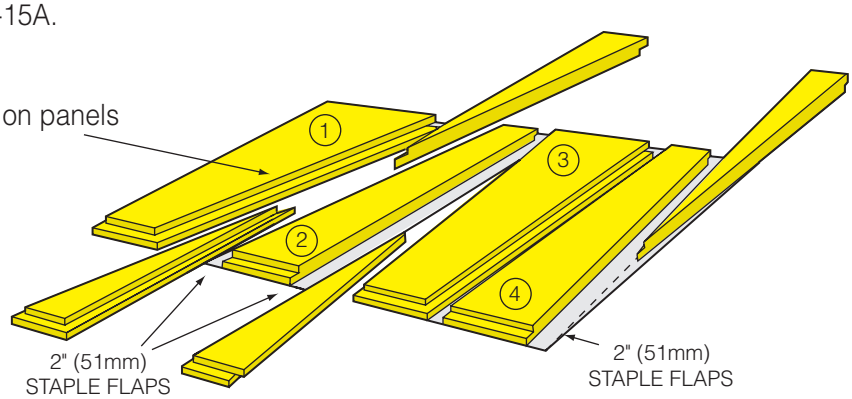

Fig. 3-15B.

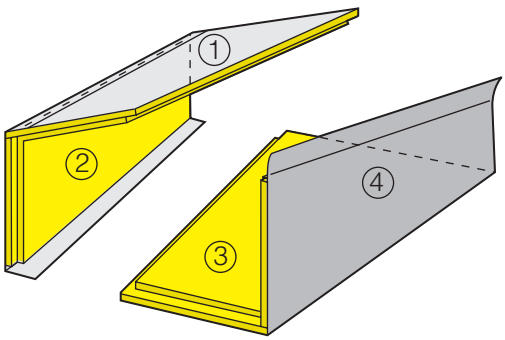

Fig. 3-15C.

4. Staple and tape panel ① to panel ②. Staple and tape panel ② to panel ③. See Fig. 3-15C. Fold into finished shape and staple panel ④ to panel ①. Apply closure to all staple flaps. See Section IV, CLOSURE.

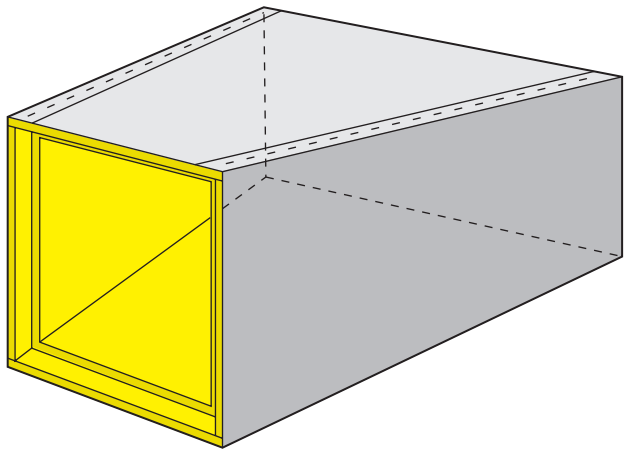

Fig. 3-15D.

TRANSITION
CHANGING HEIGHT AND WIDTH
FROM FOUR PIECES OF DUCT BOARD

1. Lay out four pieces of duct board as shown in Fig. 3-16A.
Panels ① and ③ have square-cut edges with staple flaps on both sides.
Panels ② and ④ have shiplapped edges on both sides, and no staple flaps.

EXAMPLE:
Inside measurements for a transition from 24" x 12" (approx. 610mm x 305mm) to 18" x 18" (approx. 457mm x 457mm) are shown in Fig. 3-16A. (Dimensions for 1" (25mm) fibrous glass duct board.)

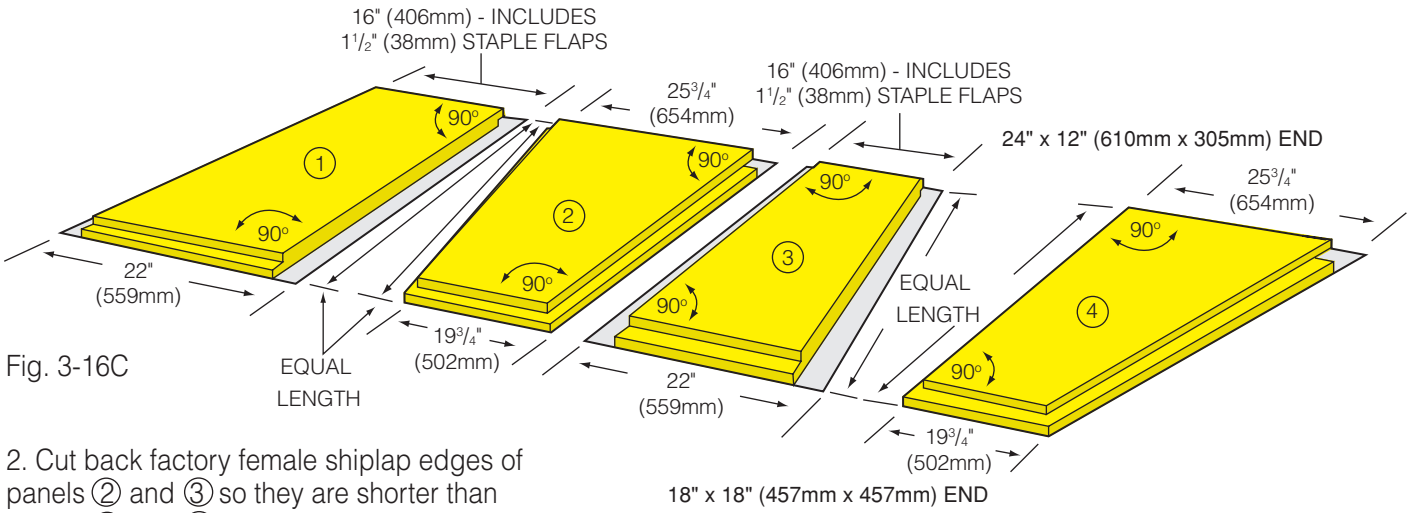

Fig. 3-16C

2. Cut back factory female shiplap edges of panels ② and ③ so they are shorter than panels ① and ④ as shown and so diagonal cuts are same length as 90° cuts, to allow for foreshortening when assembled. See Fig. 3-16A.

3. Staple panel ① to panel ②.
Staple panel ③ to panel ④. See Fig. 3-16B.
Staple assembled panels ① - ② to assembled panels ③ - ④.

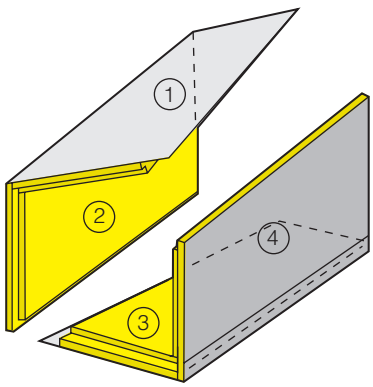

Fig. 3-16B

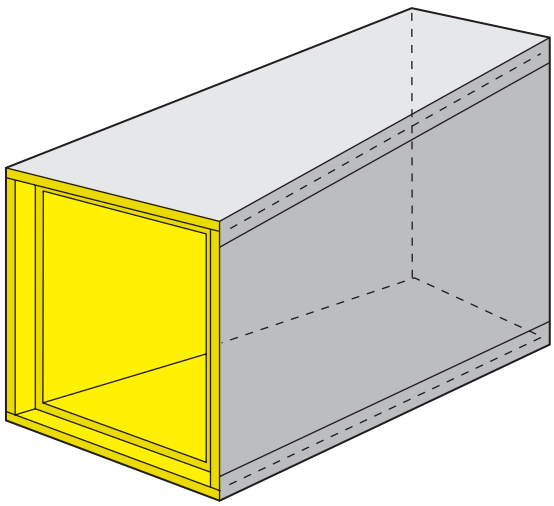

Fig. 3-16C

4. Tape all staple flaps.
See Section IV, CLOSURE.

BRANCH TAKE-OFF WITH ADJUSTABLE SPLITTER

NOTE:
Splitter damper creates turbulence in both trunk and branch. A volume damper in the branch is a better design solution.

1. Cut branch opening along dashed lines A - B and A' - B', through facing only; vertical cut, A - A', through board and facing. See Fig. 3-17A.

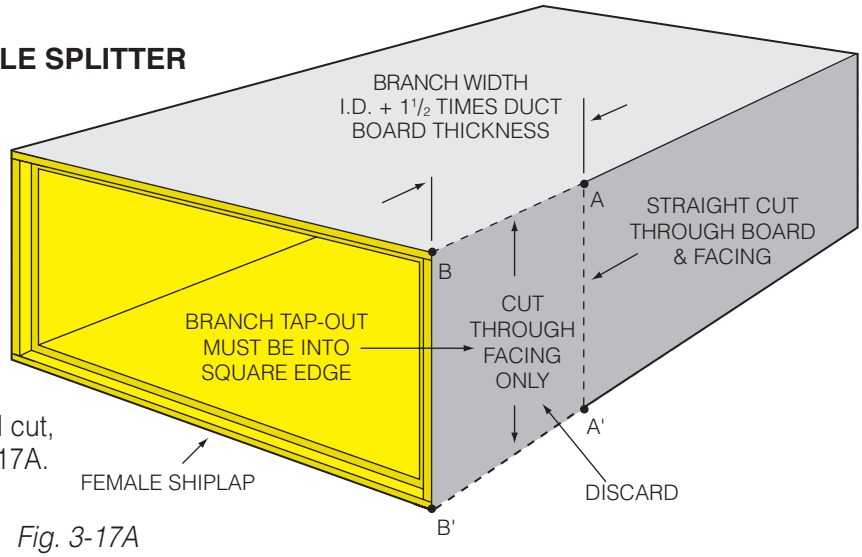

Fig. 3-17A

2. Install splitter per Fastener Schedule, Page 3-1, minimum 2 per side.

3. Install turning vanes, minimum 2 fasteners per rail. Sheet metal turning vanes must be oriented to direct air parallel to axis of next duct section.

NOTE: Turning vanes are not a substitute for reinforcement.

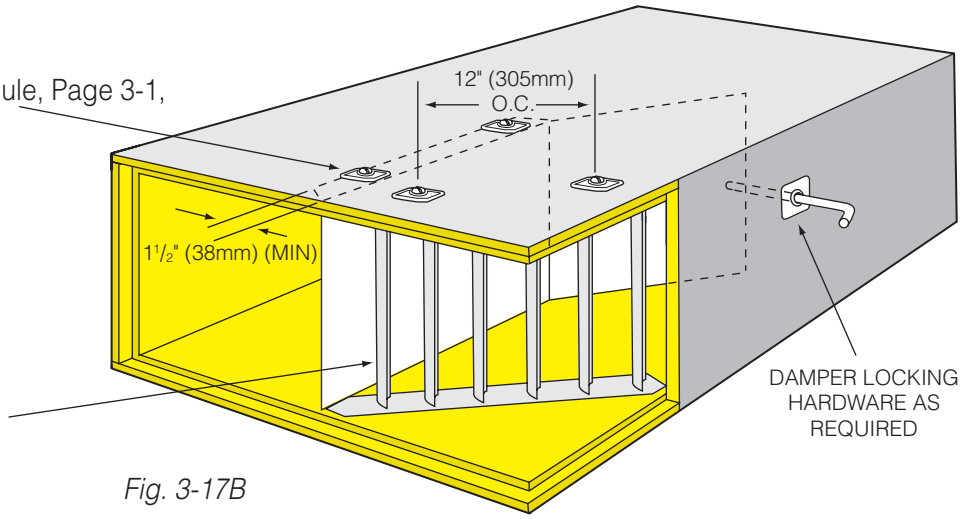

Fig. 3-17B

4. Fabricate end cap with two female shiplaps. Install in end of fitting (Fig. 3-17C) and apply tape tabs per Tape Tab Schedule, Page 3-1.

5. Apply closure, top and bottom of end cap. See Section IV, CLOSURE.

NOTE: Fibrous glass turning vanes are an acceptable substitute for metal turning vanes.

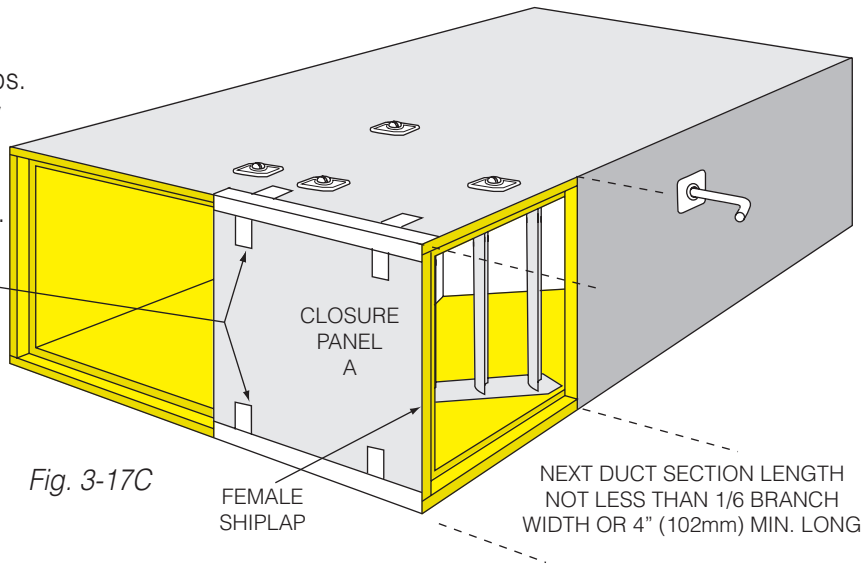

Fig. 3-17C

SQUARE AND ROUND TAP-OUTS

1. FULL HEIGHT TAP: This provides greatest strength. Tap panel must be square-edged.

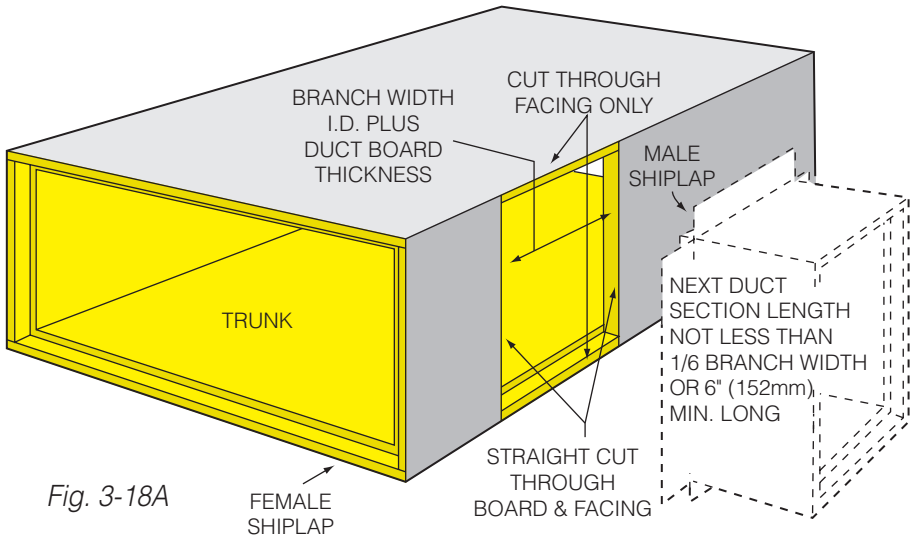

Fig. 3-18A

2. LESS THAN FULL TAP: Tap of less than full trunk height often requires trunk duct be reinforced. It is preferable to use a full trunk height tap and make the transition in the branch.

Assemble, staple and apply closure. See Section IV, CLOSURE.

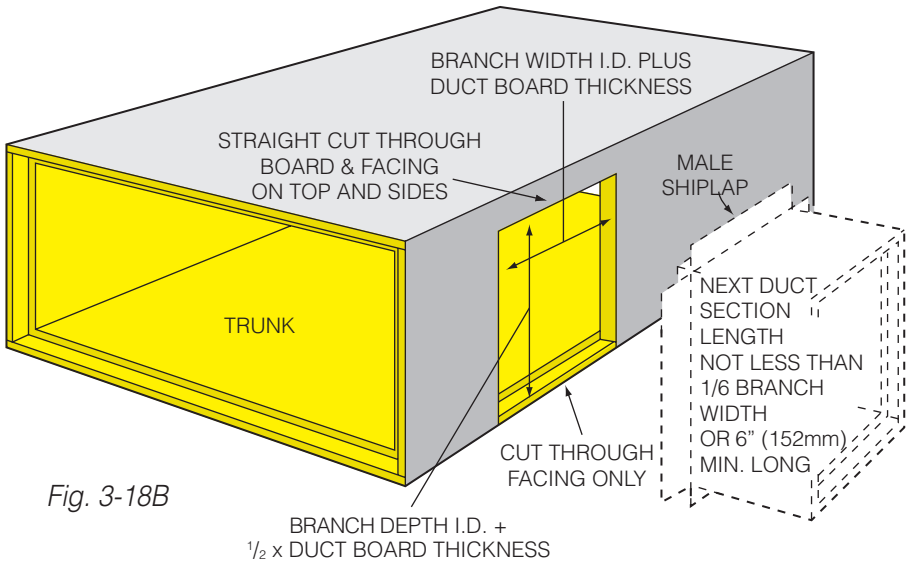

Fig. 3-18B

3. ROUND TAPS: Cut hole in trunk with round hole cutter, not with knife. Tap may be made in any panel.

NOTE: Either dove-tail or spin-in collars may be used to make round duct connections to trunk duct. See pages 4-6 and 4-7, or follow installation instructions provided by fitting and/or round duct manufacturers.

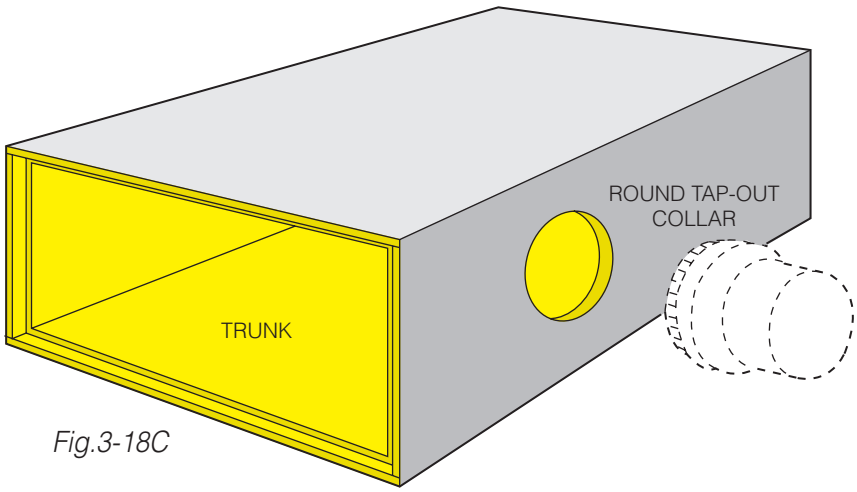

Fig.3-18C

WIDE MOUTH TAP

Dim. A = 6" (152mm) (min.) or, for taps over 30" (750mm) wide, $^1/_4$ branch width.

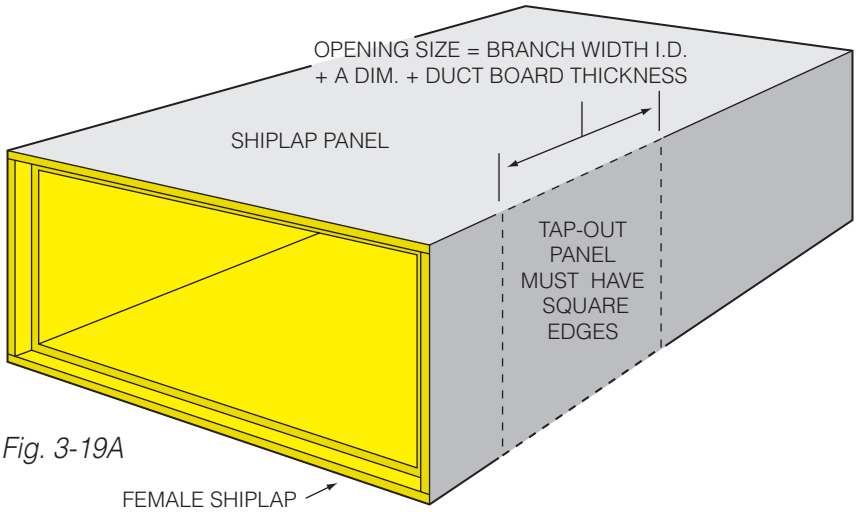

Fig. 3-19A

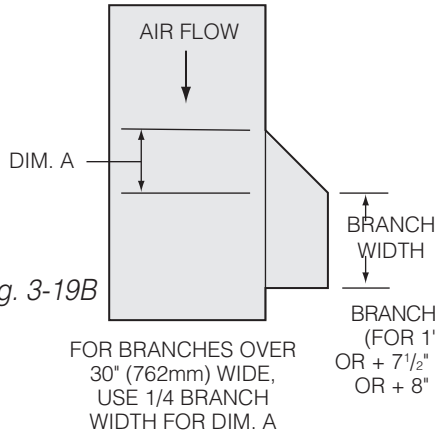

Fig. 3-19B

1. Groove downstream ends of all four pieces with female shiplap tool. Groove upstream ends of all four pieces with male shiplap tool.

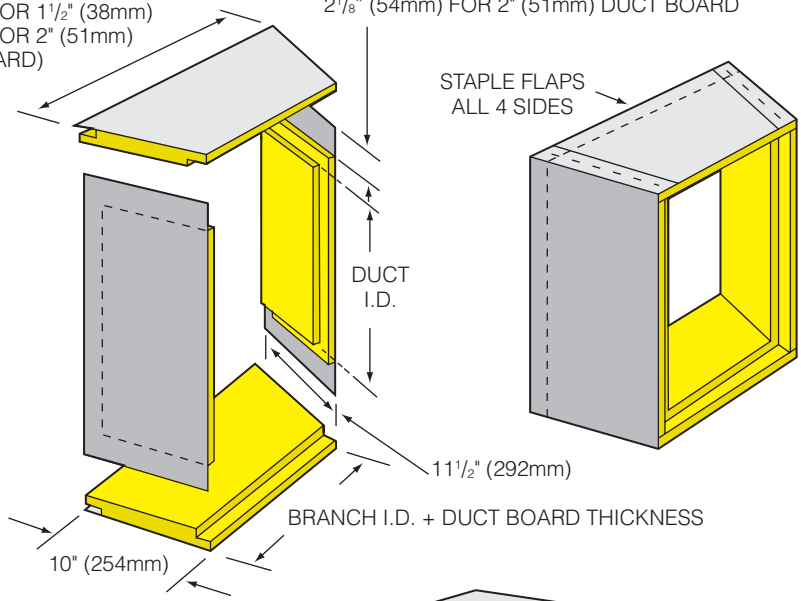

2. Assemble, staple, and apply closure. See Section IV, CLOSURE.

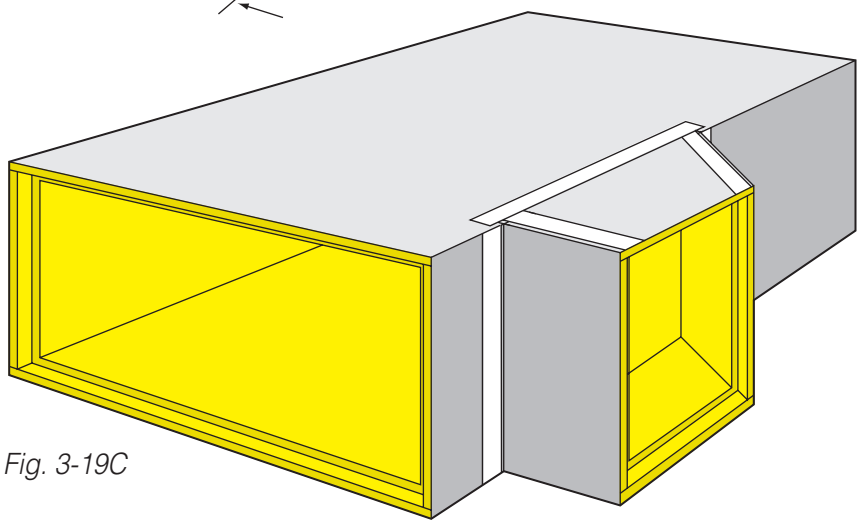

Fig. 3-19C

POSITIVE TAKE-OFF

1. Method shown produces two wide mouth taps from one 48" (1219mm) straight duct module. Original male shiplap must be cut off and replaced with a female shiplap.

2. Optional: Use hand shiplap tool for male/female joint on cheek panels ($22^1/_2$° cuts only).

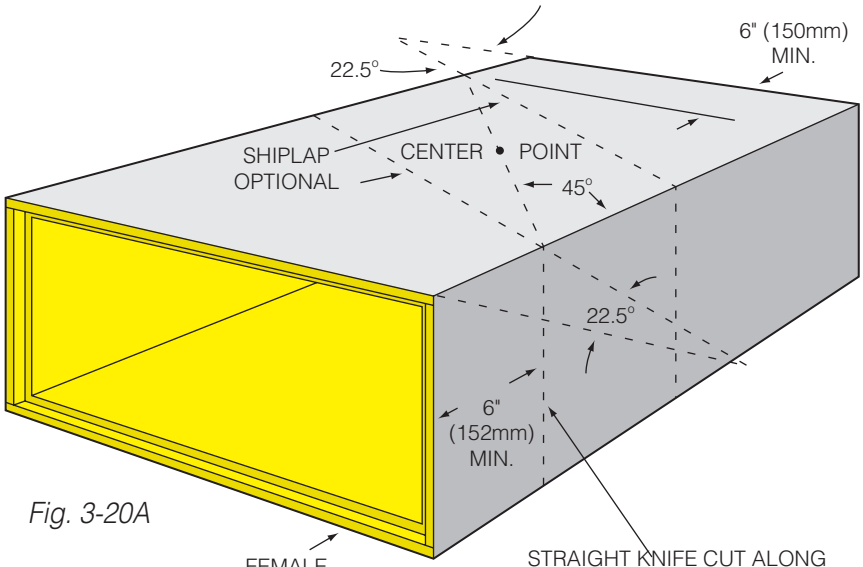

Fig. 3-20A

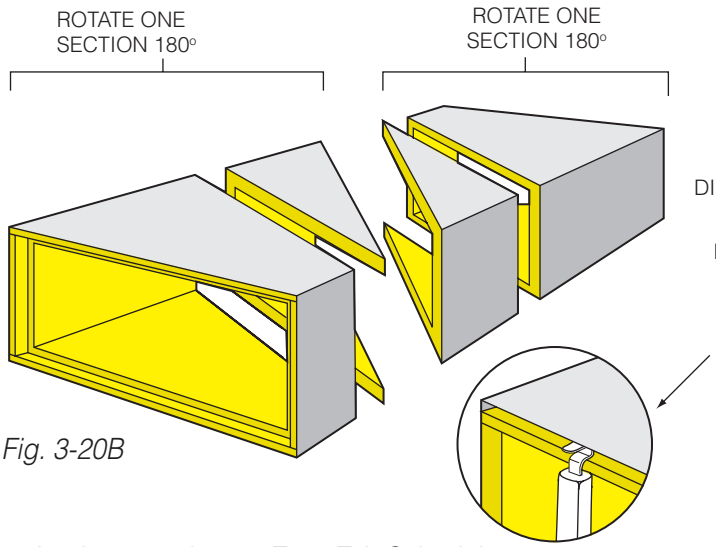

Fig. 3-20B

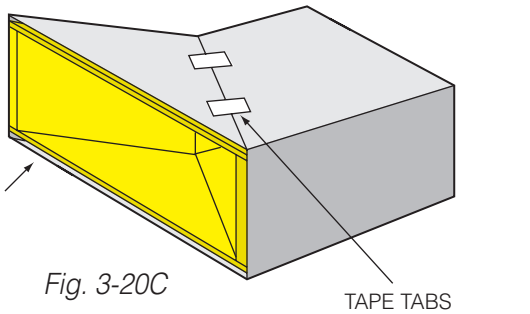

Fig. 3-20C

3. Apply tape tabs per Tape Tab Schedule, Page 3-1.

4. Assemble, staple and apply closure. See Section IV, CLOSURE.

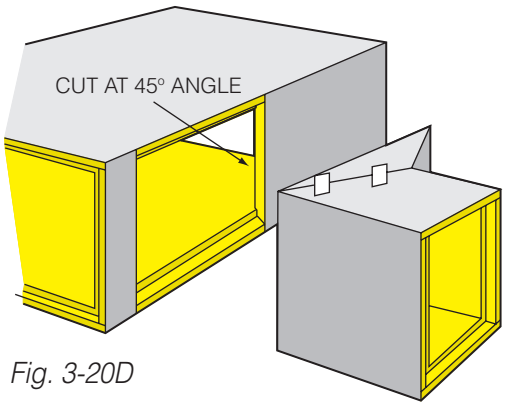

Fig. 3-20D

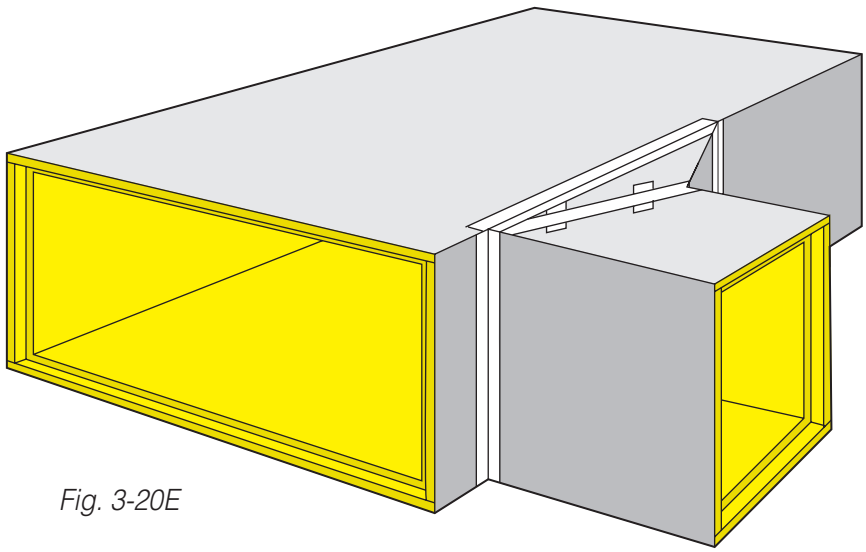

Fig. 3-20E

END CAPS

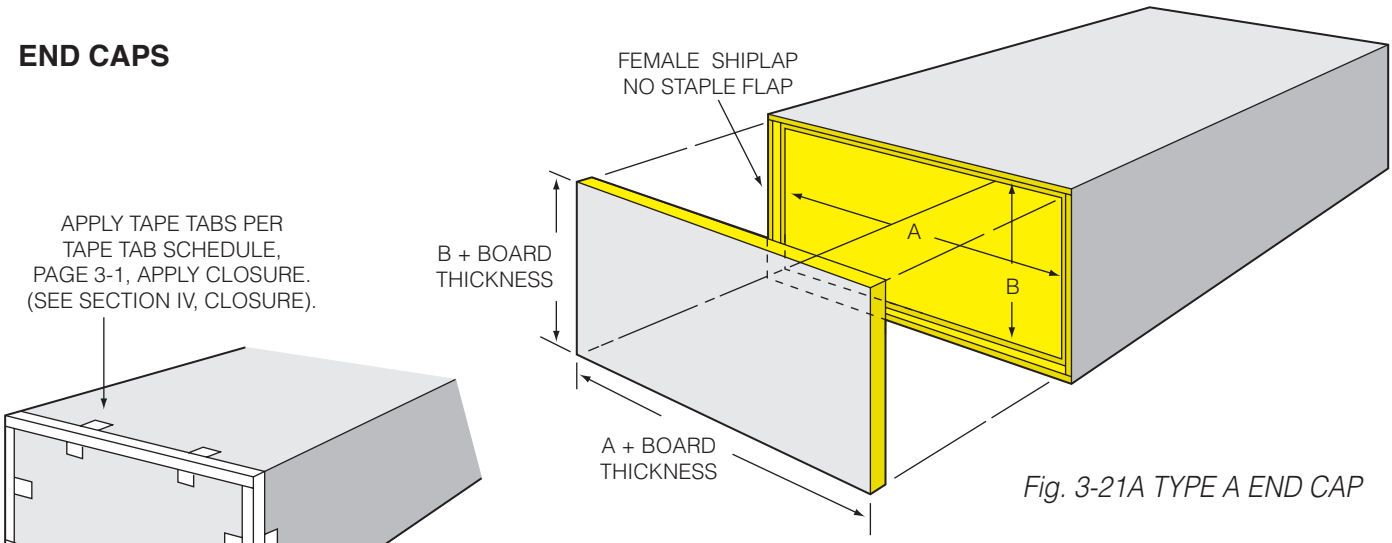

Fig. 3-21A TYPE A END CAP

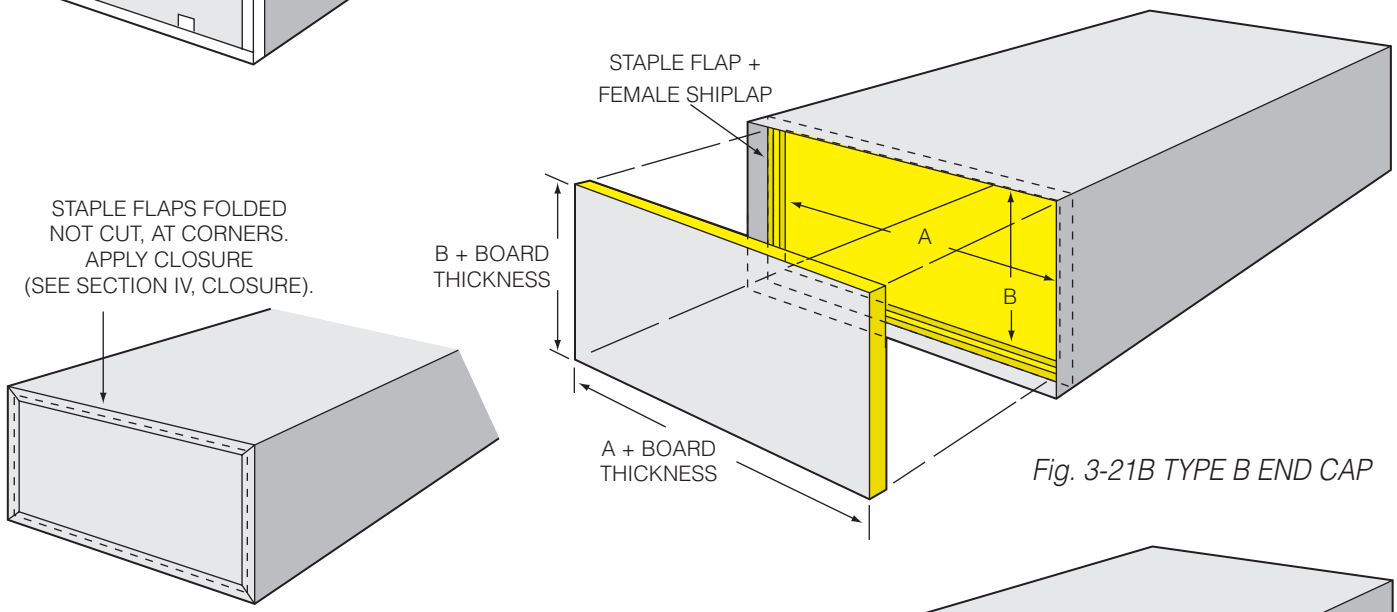

Fig. 3-21B TYPE B END CAP

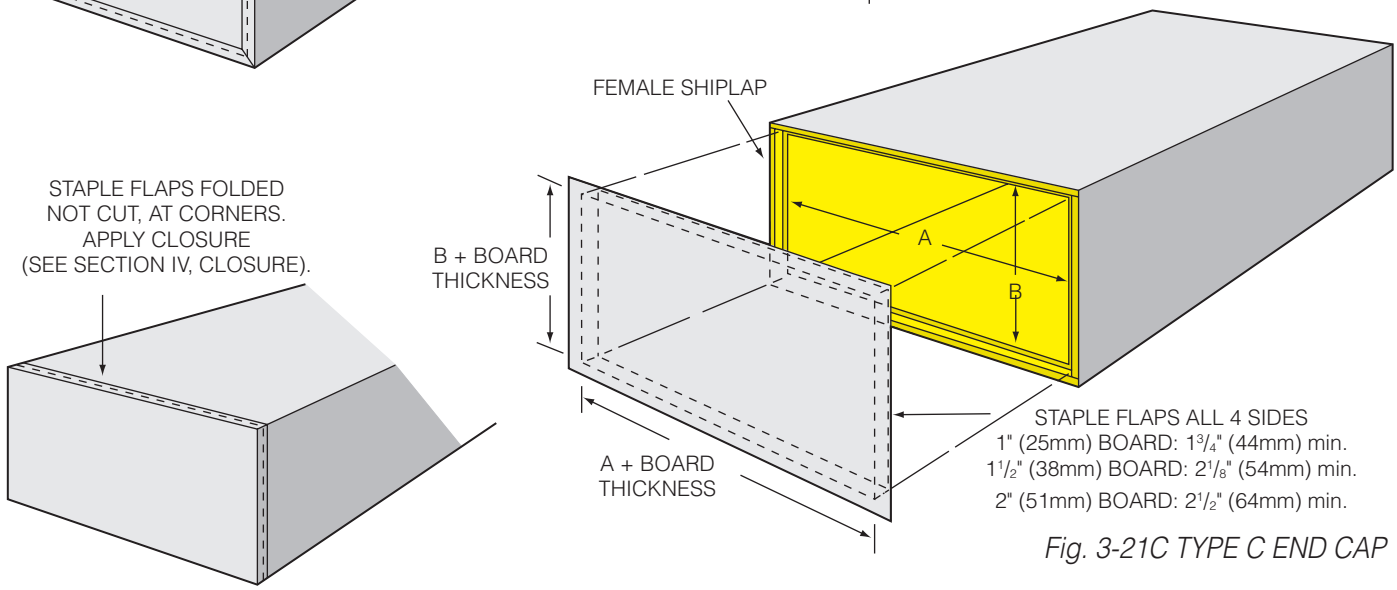

Fig. 3-21C TYPE C END CAP

VOLUME DAMPER INSTALLATION

Transverse joint in duct section may be shiplapped or butt joint.

1. Install sheet metal sleeve so damper shaft is located at transverse joint. See table below for sheet metal gauge.

DUCT SPAN, IN. (mm)	SHEET METAL GAUGE
Less than 12" (305mm)	26
13 to 30" (330 to 762mm)	24
31 to 54" (787 to 1372mm)	22

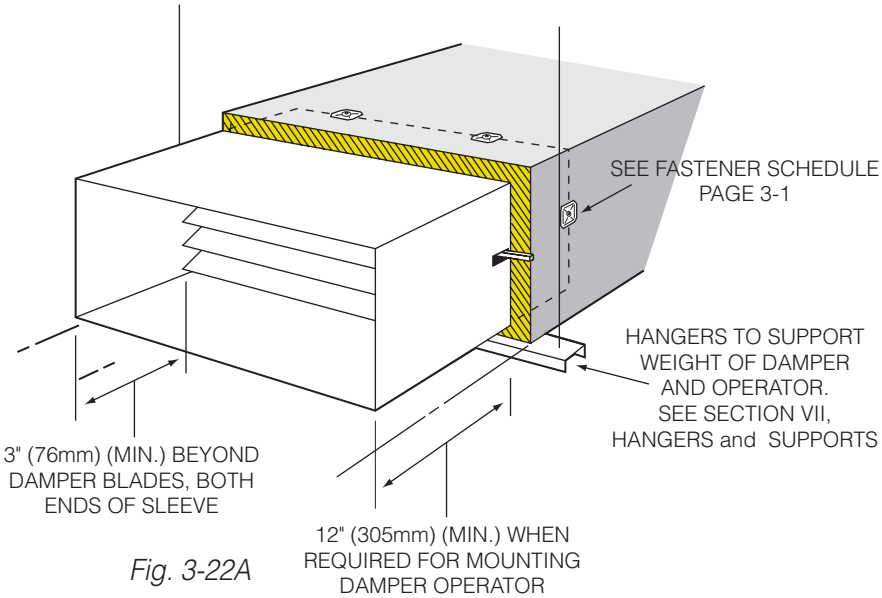

Fig. 3-22A

2. Attach operator mounting brackets per fastener schedule, min. 2" (51mm) each end of bracket, min. 2 per side.

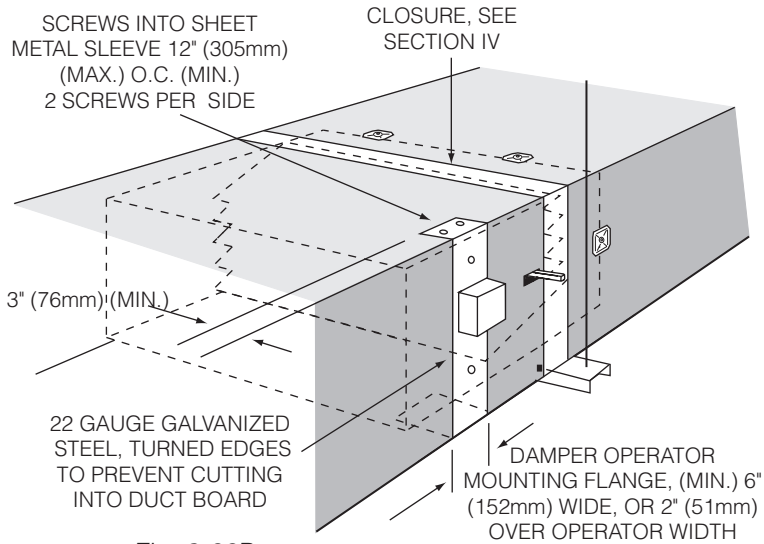

Fig. 3-22B

SINGLE BLADE VOLUME DAMPER

3. When single blade dampers are installed with suitable mounting hardware in ducts exceeding dimensions shown in Fig. 3-22C, sheet metal sleeves and extra hangers are required. Hem damper blade as needed for stiffness.

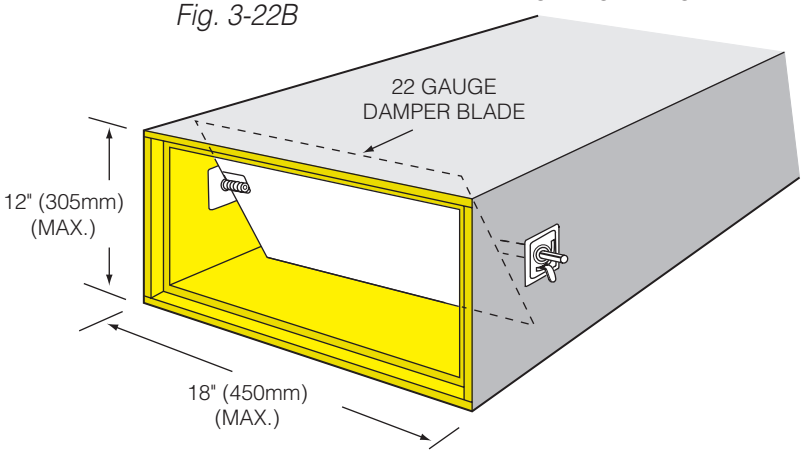

Fig. 3-22C

FIRE DAMPER INSTALLATION

1. Install sheet metal sleeve through rated fire wall. Check local codes and damper manufacturer's installation instructions for proper sheet metal gauge and attachment angle.

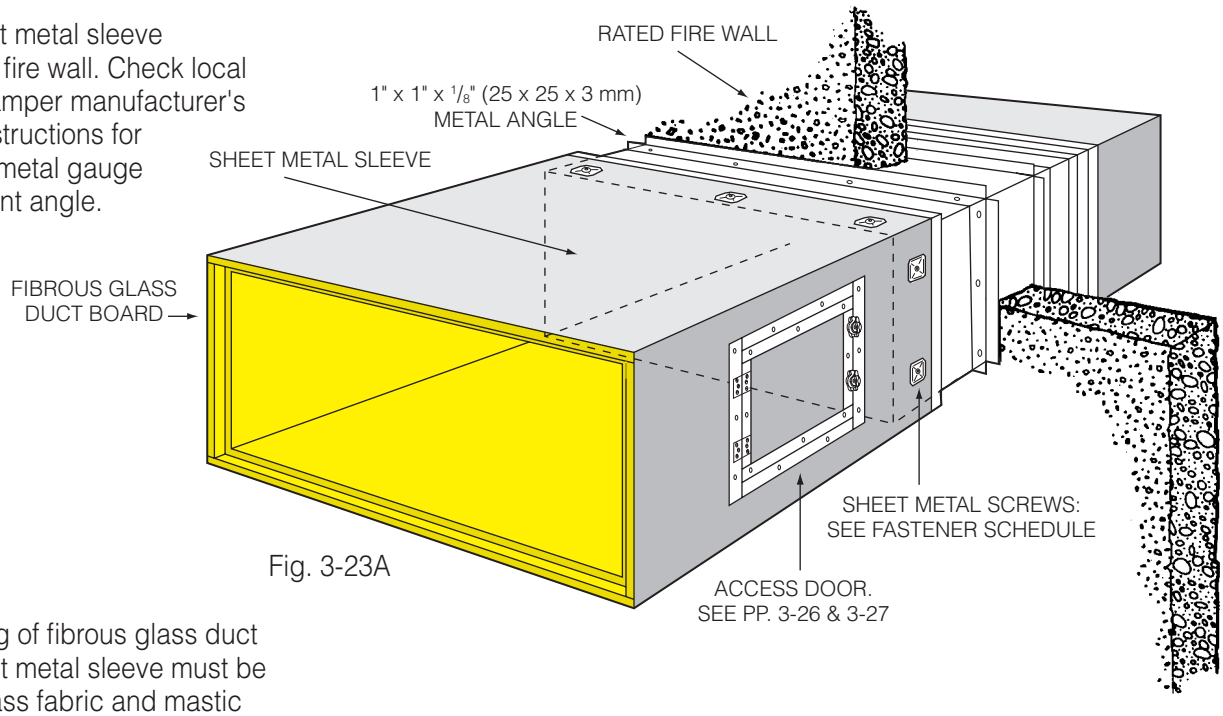

Fig. 3-23A

NOTE: Sealing of fibrous glass duct board to sheet metal sleeve must be made with glass fabric and mastic except where operating pressure is less than 1" w.g. (250 Pa) and sheet metal surfaces are carefully cleaned, in which case pressure-sensitive aluminum foil tape may be used. See Section IV, CLOSURE.

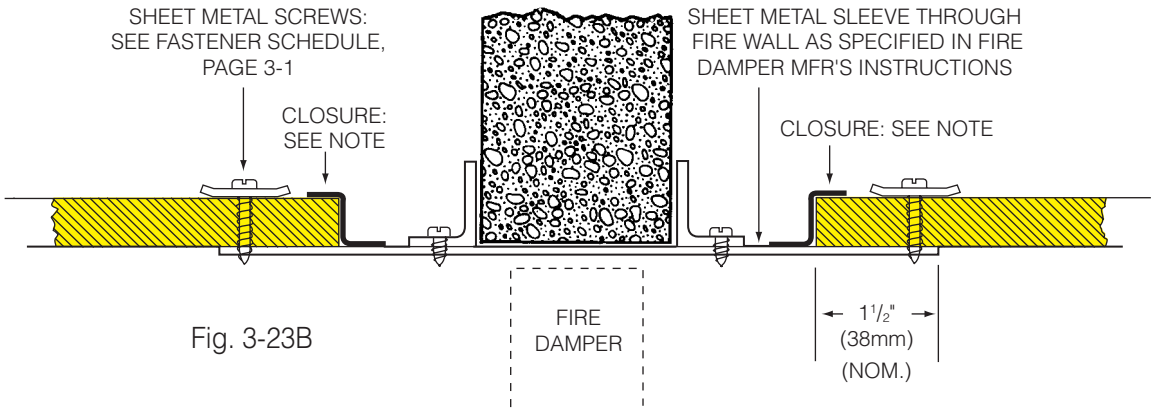

Fig. 3-23B

FLANGED HOT WATER HEATER INSTALLATION

1, Screw flanged sheet metal sleeve, 6" (152mm) (min.) long, 26 gauge, to heater flange, with suitable fasteners inserted into ends of duct.

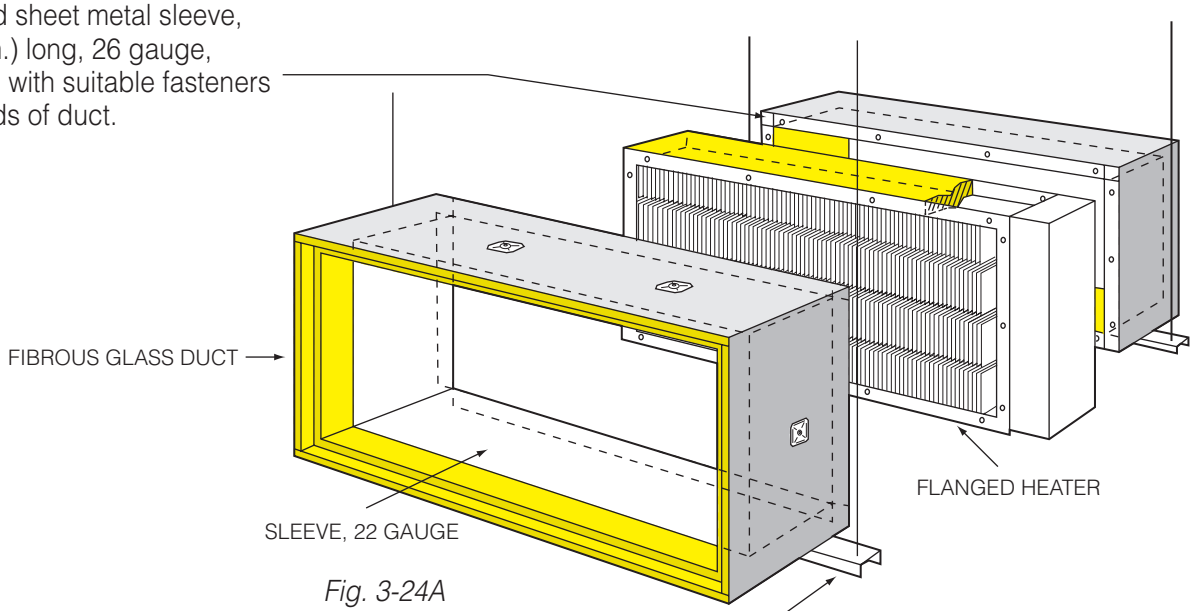

Fig. 3-24A

2. Install hangers at sleeves to support heater weight. Hang heater separately if weight exceeds 50 pounds (23 kg.). See Section VI, HANGERS AND SUPPORTS

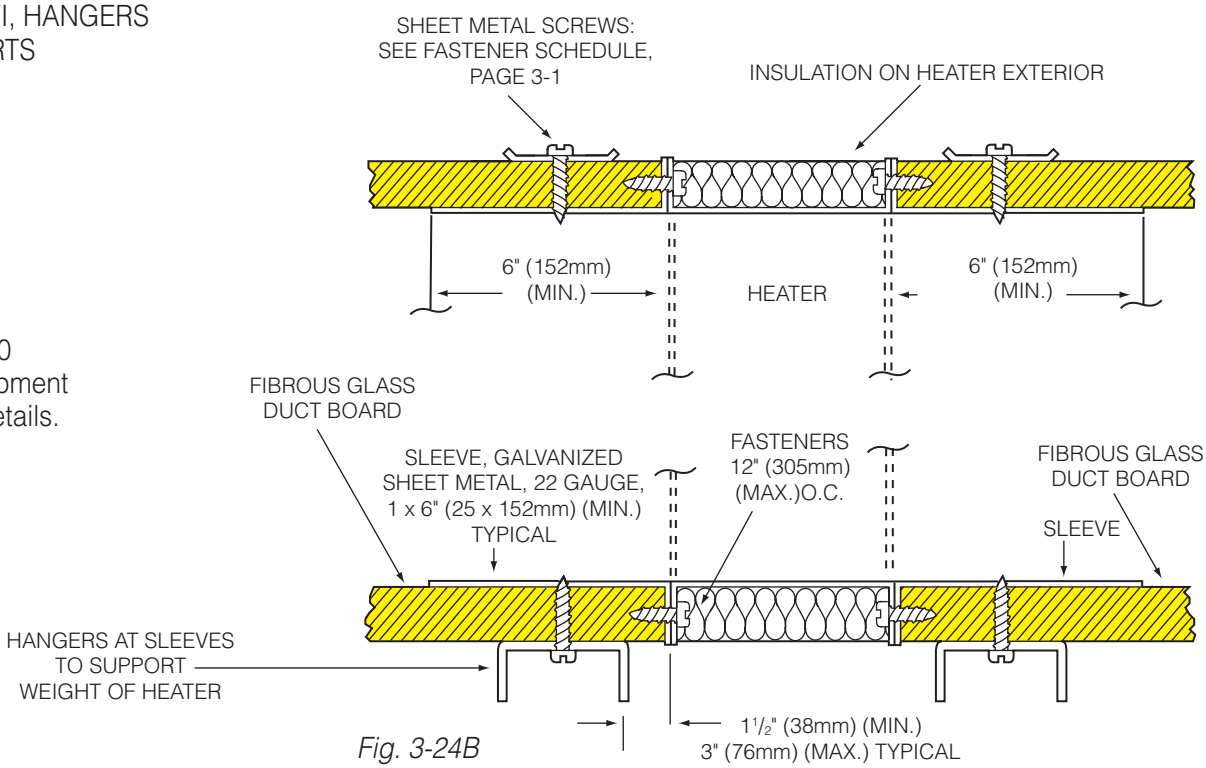

Fig. 3-24B

See Page 3-30 for other equipment connection details.

SLIP-IN EQUIPMENT INSTALLATION

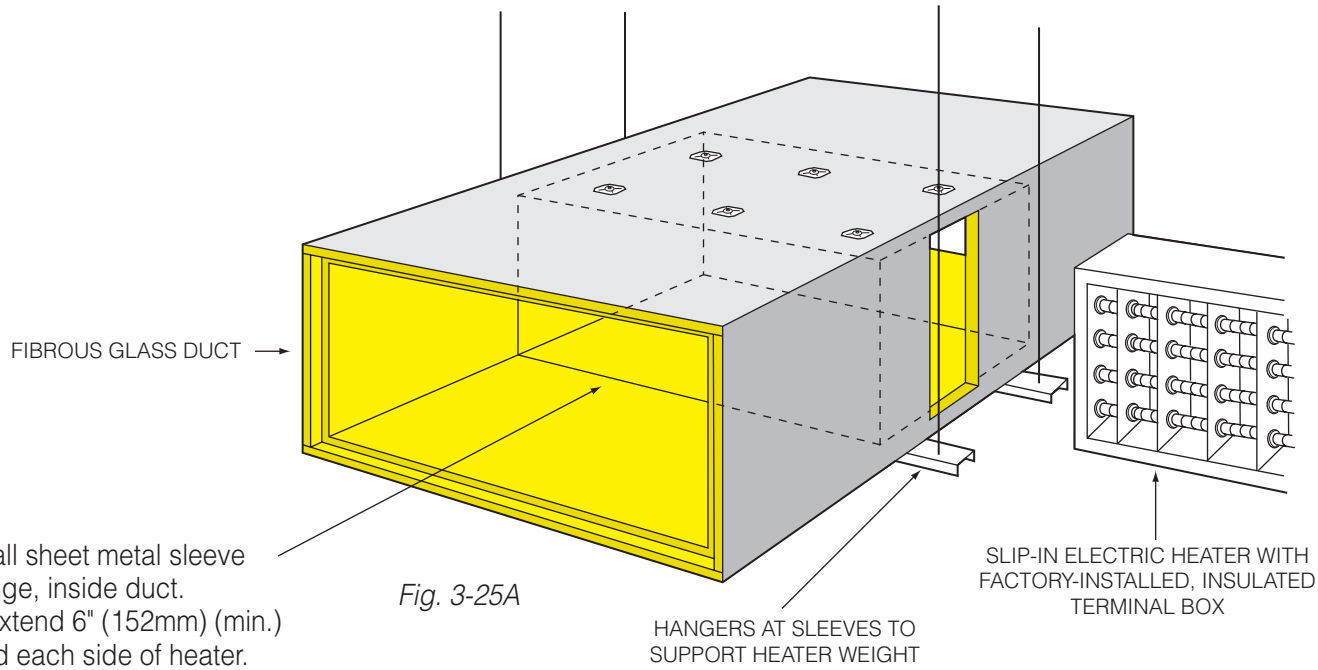

1. Install sheet metal sleeve 26 gauge, inside duct. Must extend 6" (152mm) (min.) beyond each side of heater.

Fig. 3-25A

2. Install hangers at sleeves to support heater weight. Hang heater separately if weight exceeds 50 pounds (23 kg.). See Section VI, HANGERS AND SUPPORTS

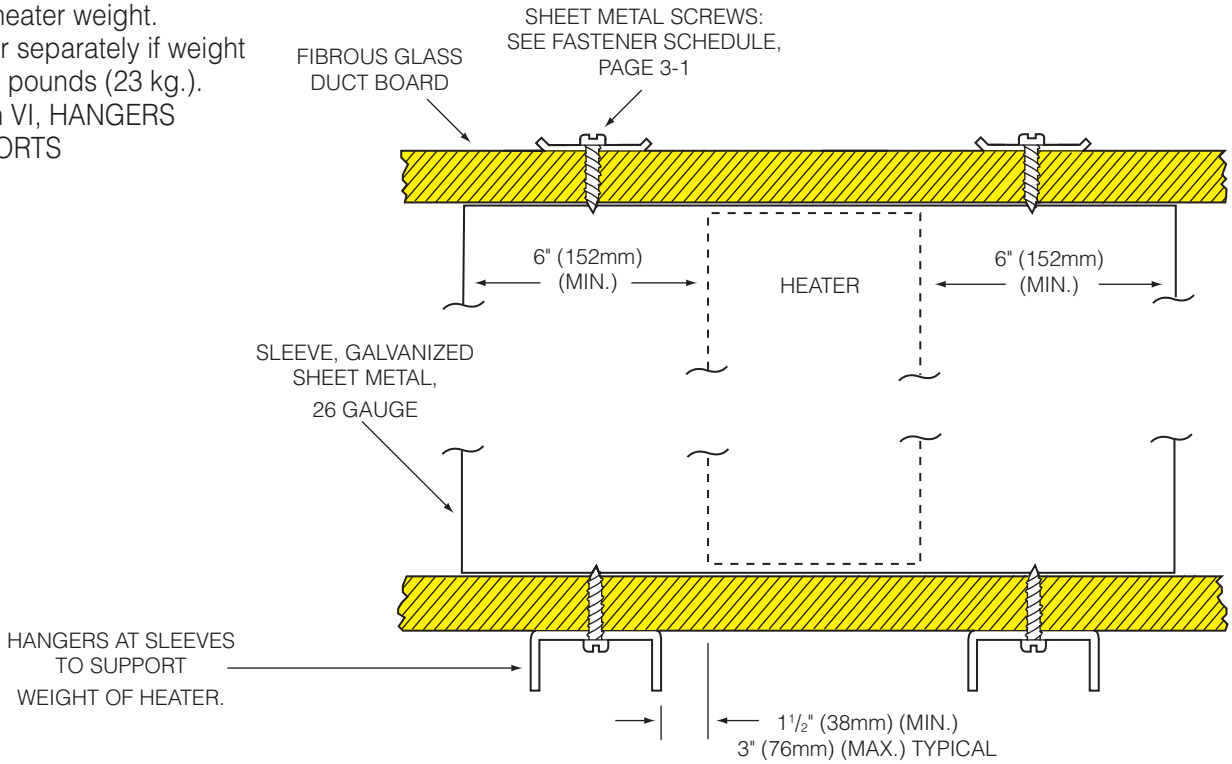

Fig. 3-25B

ACCESS DOOR, FLANGE ON OPENING IN DUCT

PRESSURE RANGE INCHES W.G. (Pa)	ACCESS DOOR SIZE INCHES (mm)
0 to 1 (0 to 250 Pa)	24 x 24 max. (610 x 610mm) max.
1 to 2 (250 to 500 Pa)	16 x 16 max. (406 x 406mm) max.

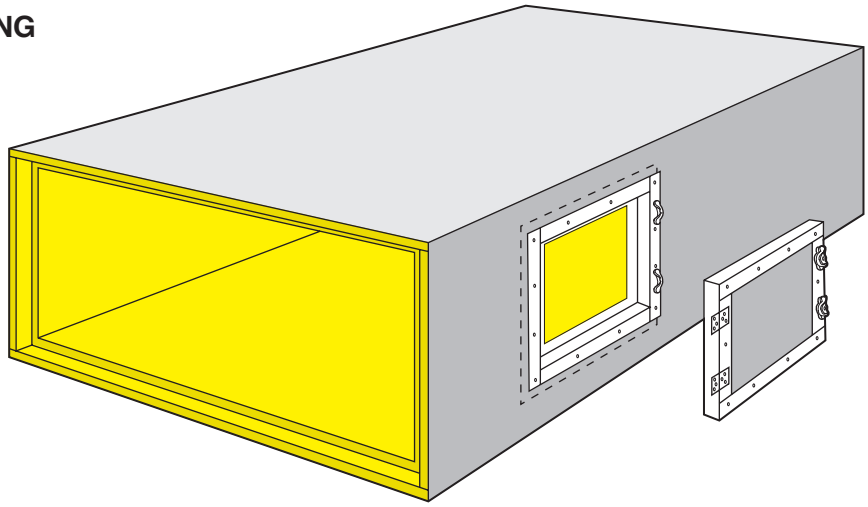

Fig. 3-26A

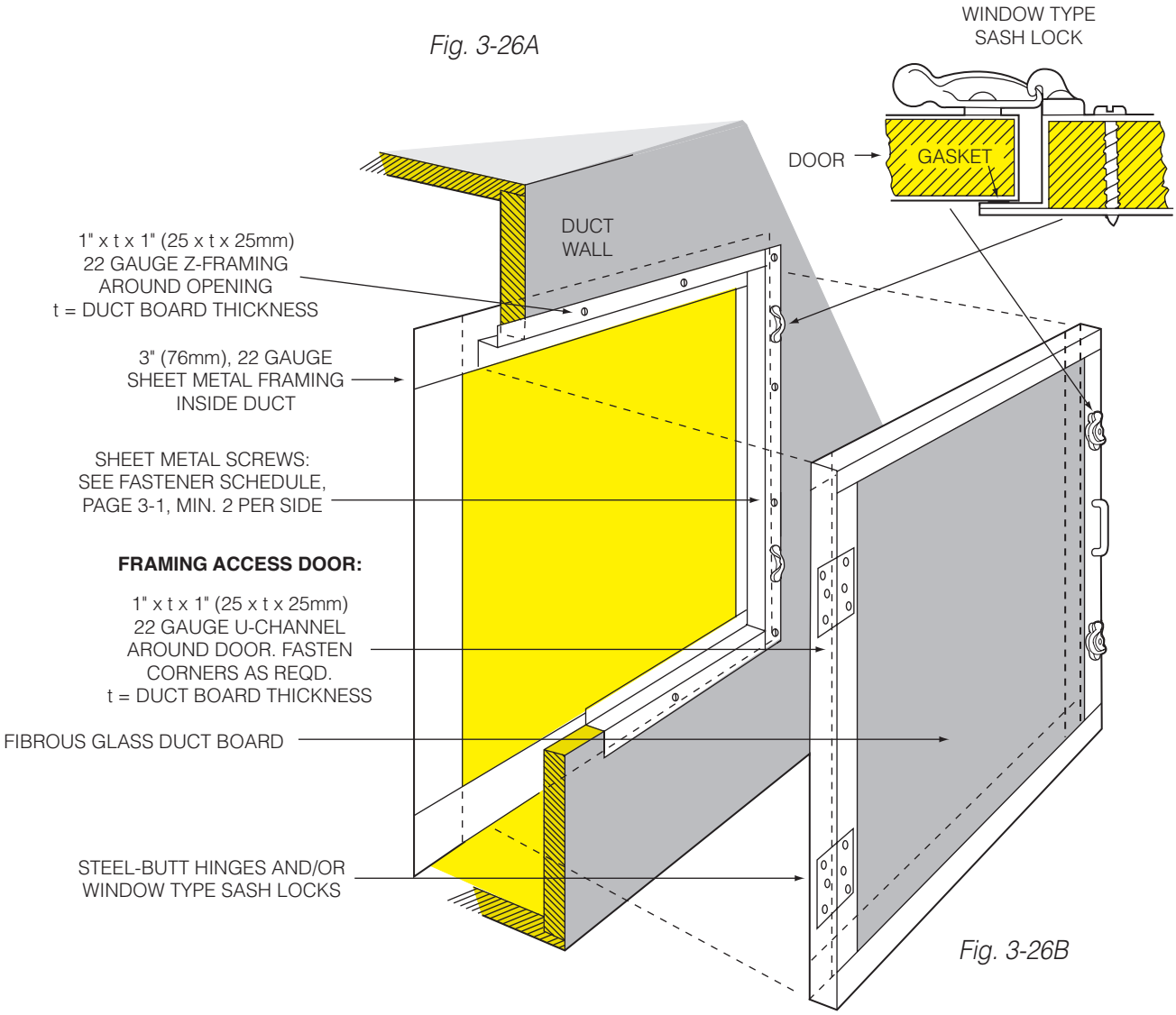

Fig. 3-26B

ACCESS DOOR, FLANGE ON DOOR

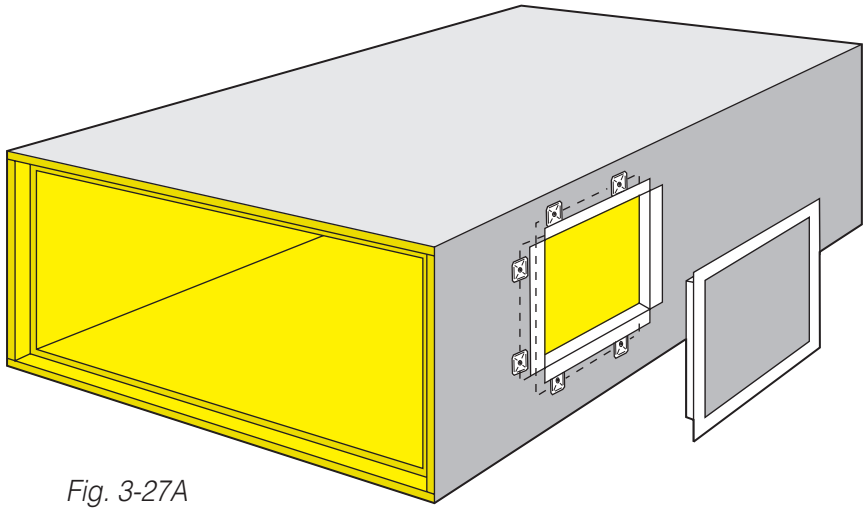

PRESSURE RANGE INCHES W.G. (Pa)	ACCESS DOOR SIZE INCHES (mm)
0 to 1 (0 to 250 Pa)	24 x 24 max. (610 x 610mm) max.
1 to 2 (250 to 500 Pa)	16 x 16 max. (406 x 406mm) max.

Fig. 3-27A

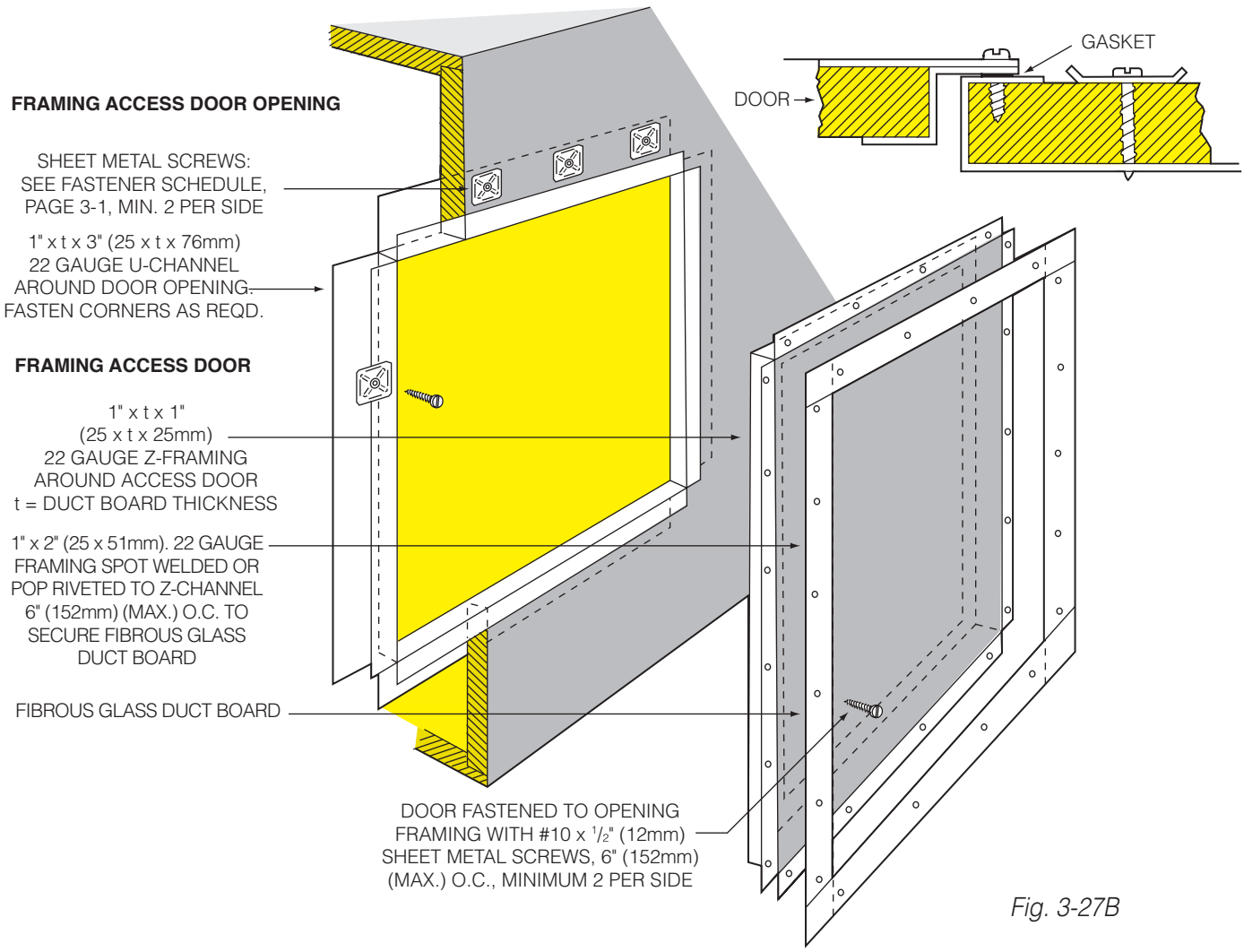

Fig. 3-27B

REGISTER & GRILL ATTACHMENT

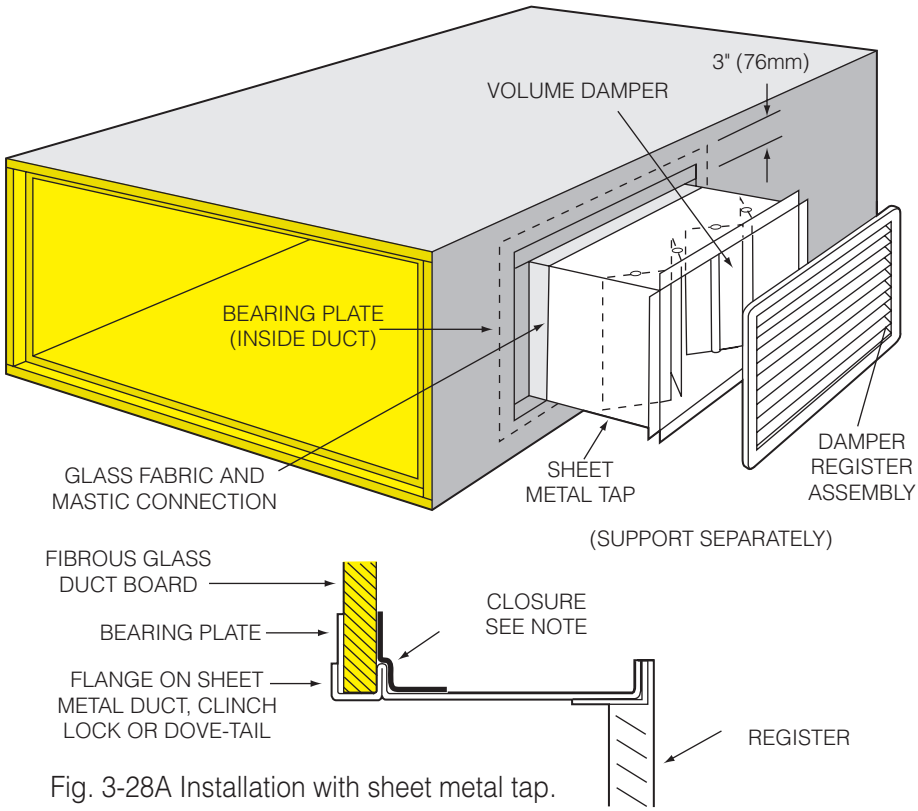

Fig. 3-28A Installation with sheet metal tap.

Sheet metal tap connection requires use of bearing plate inside duct. Sleeve and bearing plate sheet metal gauge are shown in table below.

DUCT SPAN, INCHES (mm)	SHEET METAL GAUGE
0 to 12" (0 to 305mm)	26
13 to 30" (330 to 750mm)	24
31 to 54" (787 to 1372mm)	22

NOTE: Sealing of fibrous glass duct board to sheet metal sleeve must be made with glass fabric and mastic except where operating pressure is less than 1" w.g. (250 Pa) and sheet metal surfaces are carefully cleaned, in which case pressure-sensitive aluminum foil tape may be used. See Section IV, CLOSURE.

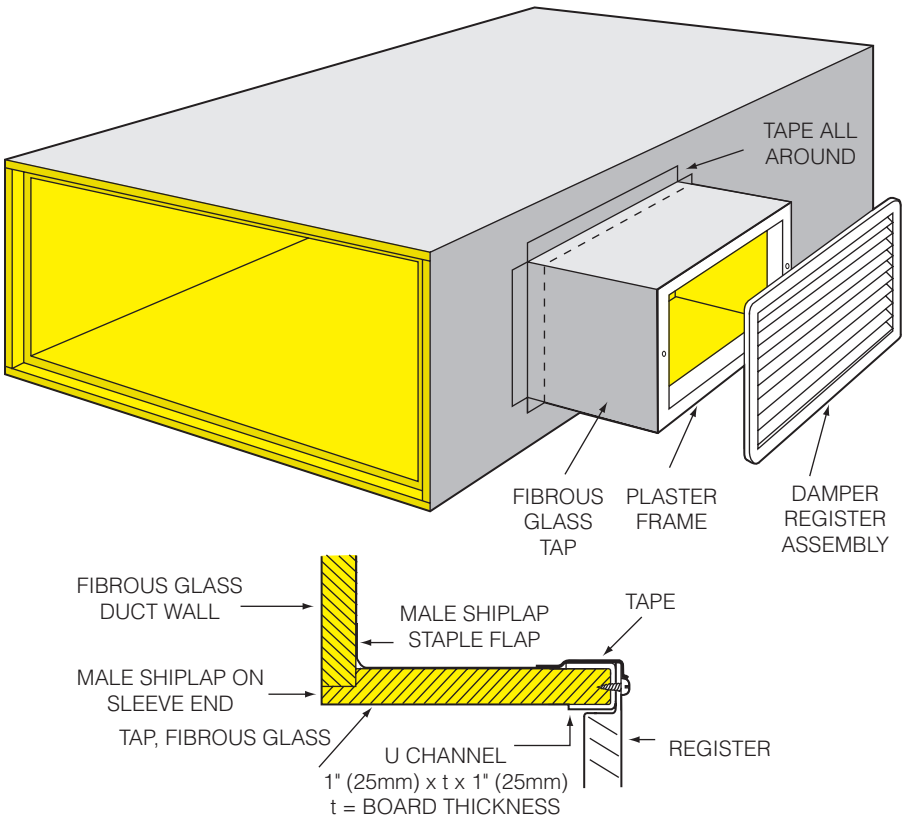

Fig. 3-28B Installation with fibrous glass tap.

DIFFUSER DROP CONNECTIONS

1. Staple and tape male shiplap flap to trunk duct. Drop and diffuser are separately supported.

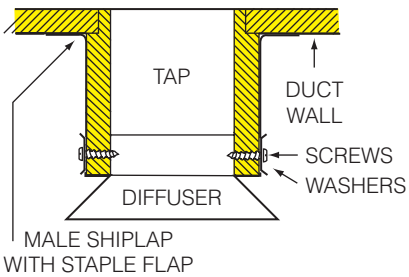

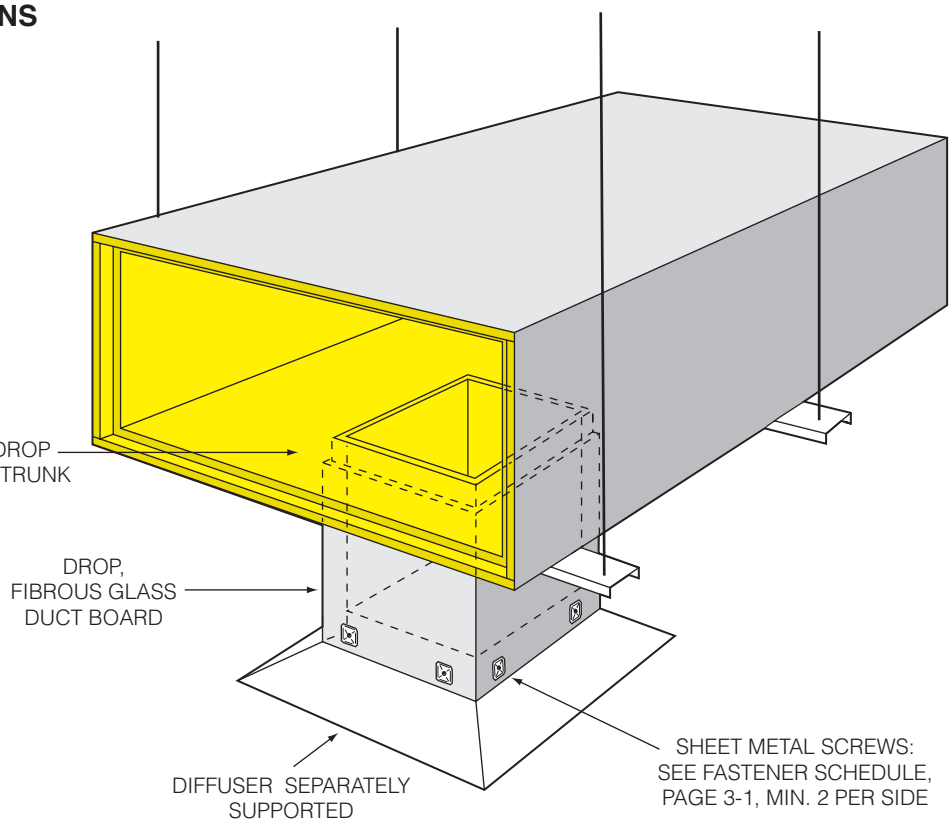

2. If hangers must be moved to accommodate the diffuser drop, do not exceed maximum spacing when reinstalling. See Section VI, HANGERS and SUPPORTS

Fig. 3-29. Installation with stapling flap.

CONNECTIONS TO SHEET METAL

Sealing of fibrous glass duct board to sheet metal sleeve must be made with glass fabric and mastic except where operating pressure is less than 1" w.g. (250 Pa) and sheet metal surfaces are carefully cleaned, in which case pressure-sensitive aluminum foil tape may be used. See Section IV, CLOSURE.

All mechanical connections (screws or screws and washers) of fibrous glass duct to equipment must be 12" (305mm) (max.) on centers.

Washers shall be 0.028" (0.7mm) thick (min.), with turned edges to prevent their cutting into the duct board or the facing.

FASTENER SCHEDULE
#10 plated sheet metal screws, board thickness + $^1/_4$" (6mm) with $2^1/_2$" (64mm) square or 3" (76mm) round plated steel washers 12" (305mm) nominal on centers.

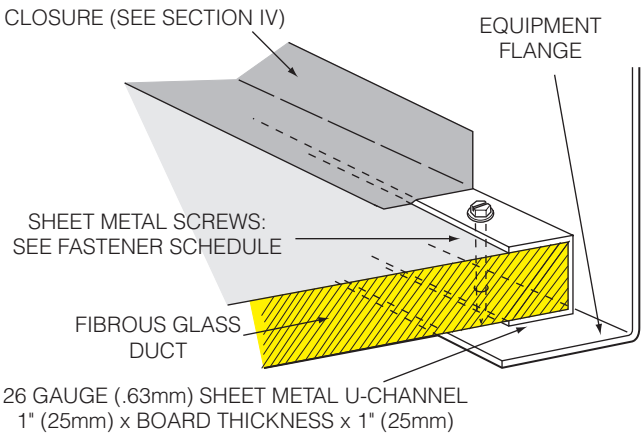

Fig. 3-30A

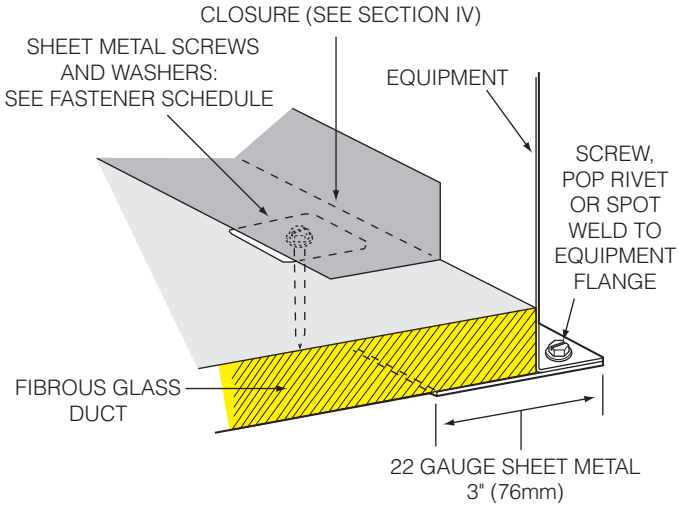

Fig. 3-30C

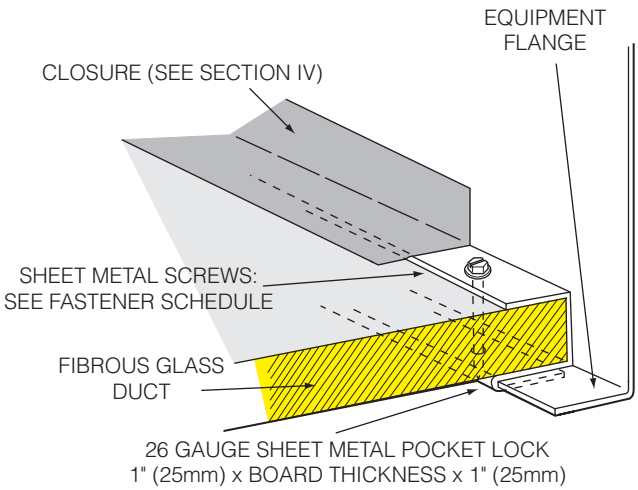

Fig. 3-30B

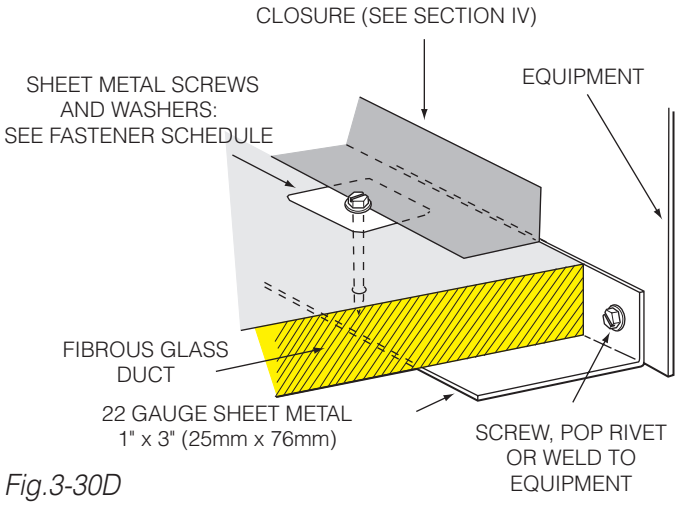

Fig.3-30D

FABRICATION WITH TEN-SIDED FIBROUS GLASS DUCT

Ten-sided fibrous glass duct is approximately round in cross-section, and is an acceptable substitute for rigid round duct.

Sections of ten-sided duct up to 10 ft (3.05m) may be fabricated from standard fibrous glass duct board with a grooving machine equipped with the required tooling. A gauge is used to set the spacing between groove cutting tools (Fig. 3-31A).

Circumferential joints may be shiplapped or butt-edged. Male and female ends should be fabricated while the material is in flat board form.

Internal metal sleeves must be used on all return air ducts, and on supply ducts without shiplap joints.

Typical fittings, such as elbows, branch connections, tees, and offsets can be fabricated with ten-sided fibrous glass duct. Examples are shown below (Fig. 3-31B).

Fig. 3-31A. Duct board grooving machine set up for cutting ten-sided fibrous glass duct.

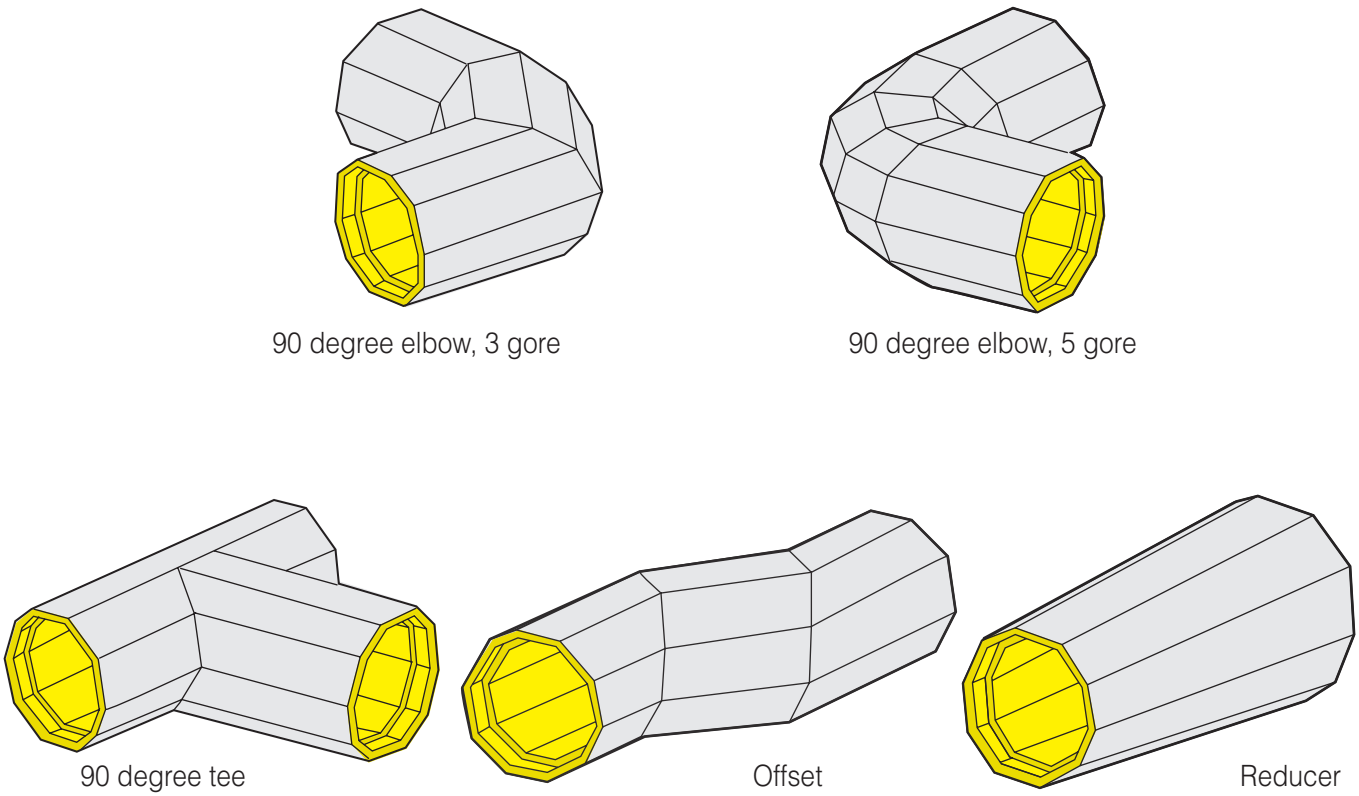

Fig. 3-31B. Typical ten-sided fibrous glass duct fittings.

BOARD UTILIZATION, TEN-SIDED DUCT

The table below shows options available in converting standard duct board sizes into ten-sided duct. The table is based on ideal tool settings. Because of variation in blade settings, tool bar height, and size of sheet metal fittings which might be used with ten-sided duct, the fabricator should always check material made on his specific machine for dimensional accuracy before producing large quantities of duct. He should also select the best combination of duct board length versus drop-off which fits the specific ten-sided duct application.

Example:

20 ft. (6.1m) lengths of 5" (127mm) nominal inside diameter ten-sided duct can be made in two ways:

(1) With two sections 10 ft. (3.05 m) long;
(2) With five sections 4 ft. (1.2m) long.

Both involve minimum drop-off. Use of 20 ft. (6.1m) of ten-sided duct in 10 ft. (3.05 m) lengths has the advantage of requiring only one circumferential joint, compared to four required for 4-section construction.
In making 4 ft. (1.2 m) long, 7" (178mm) nominal inside diameter ten-sided duct, 10 ft. (3.05 m) duct board will yield four sections with essentially no drop-off.
8 ft. (2.4m) duct board yields 3 sections with 2.3 sq.ft. (.21 m^2) of scrap. Be certain to check your specific tool arrangement to verify these values.

TEN-SIDED DUCT BOARD UTILIZATION, 1" (25mm) DUCT BOARD

10 ft. (3.05m) ducts from 4 ft. (1.2m) duct board

Nominal inside diam., in	(mm)	No. of sections	Material left, in.	(mm)	Drop-off, ft^2	(m^2)
5	(127)	2	1	(25)	0.8	(0.24)
6	(152)	1 1/2	7 1/2	(191)	6.3	(1.92)
7	(178)	1 1/2	2 7/8	(73)	2.4	(0.73)
8	(203)	1	15 1/8*	(384)	12.6	(3.84)
9	(229)	1	12	(305)	10.0	(3.05)
10	(254)	1	8 7/8	(225)	7.4	(2.25)
11	(279)	1	5 3/4	(146)	4.8	(1.46)
12	(305)	1	2 5/8	(67)	2.2	(0.67)
13	(330)	1/2	23 1/4*	(591)	19.4	(5.91)
14	(356)	1/2	21 5/8*	(549)	18.0	(5.49)
15	(381)	1/2	20 1/8*	(511)	16.8	(5.12)
16	(406)	1/2	18 1/2*	(470)	15.4	(4.69)
17	(432)	1/2	17*	(432)	14.2	(4.33)
18	(457)	1/2	15 3/8*	(391)	12.8	(3.90)
19	(483)	1/2	13 7/8*	(352)	11.6	(3.54)
20	(508)	1/2	12 1/4*	(311)	10.2	(3.11)

4 ft. (1.2m) ducts from 10 ft. (3.05m) duct board

Nominal inside diam., in	(mm)	No. of sections	Material left, in.	(mm)	Drop-off, ft^2	(m^2)
5	(127)	5	2 1/2	(63)	0.8	(0.24)
6	(152)	4	13 1/2*	(243)	4.5	(1.37)
7	(178)	4	1	(25)	0.3	(0.09)
8	(203)	3 1/2	4 3/8	(111)	1.5	(0.46)
9	(229)	3	12	(305)	4.0	(1.22)
10	(254)	3	2 5/8	(67)	0.9	(0.27)
11	(279)	2 1/2	13 7/8	(352)	4.6	(1.40)
12	(305)	2 1/2	6	(152)	2.0	(0.61)
13	(330)	2	23*	(584)	7.7	(2.35)
14	(356)	2	16 3/4*	(425)	5.6	(1.71)
15	(381)	2	10 1/2	(267)	3.5	(1.07)
16	(406)	2	4 1/4	(108)	1.4	(0.43)
17	(432)	1 1/2	28*	(711)	23.3	(7.10)
18	(457)	1 1/2	23 1/4*	(591)	19.4	(5.91)
19	(483)	1 1/2	18 5/8*	(473)	15.5	(4.72)
20	(508)	1 1/2	13 7/8*	(352)	11.6	(3.54)

4 ft. (1.2m) ducts from 8 ft. (2.44m) duct board

Nominal inside diam., in	(mm)	No. of sections	Material left, in.	(mm)	Drop-off, ft^2	(m^2)
5	(127)	4	2	(51)	0.7	(0.21)
6	(152)	3 1/2	2 1/4	(57)	0.8	(1.24)
7	(178)	3	6 3/4	(171)	2.3	(0.70)
8	(203)	2 1/2	13 1/4*	(337)	4.4	(1.34)
9	(229)	2 1/2	5 1/2	(140)	1.8	(0.55)
10	(254)	2	17 3/4*	(451)	5.9	(1.80)
11	(279)	2	11 1/2	(292)	3.8	(1.16)
12	(305)	2	5 1/4	(133)	1.8	(0.55)
13	(330)	1 1/2	22 3/4*	(578)	7.6	(2.32)
14	(356)	1 1/2	18*	(457)	6.0	(1.83)
15	(381)	1 1/2	13 3/8*	(340)	4.5	(1.37)
16	(406)	1 1/2	8 5/8	(219)	2.9	(0.88)
17	(432)	1 1/2	4	(102)	2.7	(0.82)
18	(457)	1	31 7/8*	(810)	21.3	(6.49)
19	(483)	1	28 3/4*	(730)	19.2	(5.85)
20	(508)	1	25 5/8*	(651)	17.1	(5.21)

*Denotes usable material.
**Half sections are five-sided with stapling flap. Joining two half sections requires two longitudinal joints.

Fig. 3-32C. Taping longitudinal joint of ten sided duct.

STRETCH-OUT TEN-SIDED DUCT

Nominal Inside Diameter		1" (25mm) duct board				1½" (38mm) duct board			
		Full Section 10 sides		Half Section 5 sides		Full Section10 sides		Half Section 5 sides	
in.	(mm)	in.	(mm)	in.	(mm)	in.	(mm)	in.	(mm)
5	(127)	23 3/4	(603)	12 3/8	(314)	27 3/4	(705)	14 3/8	(365)
6	(152)	26 7/8	(683)	13 15/16	(354)	30 7/8	(784)	15 15/16	(405)
7	(178)	30	(762)	15 1/2	(394)	34	(864)	17 1/2	(445)
8	(203)	33 1/8	(841)	17 1/16	(433)	37 1/8	(943)	19	(483)
9	(229)	36 1/4	(921)	18 5/8	(473)	40 1/4	(1022)	20 5/8	(524)
10	(254)	39 7/16	(1002)	20 1/4	(514)	43 7/16	(1103)	22 1/4	(565)
12	(305)	45 3/4	(1162)	23 3/8	(594)	46 11/16	(1186)	25 3/8	(645)
14	(356)	52	(1321)	26 1/2	(673)	56	(1422)	28 1/2	(724)
16	(406)	58 1/4	(1480)	29 5/8	(752)	62 1/4	(1581)	31 5/8	(803)
18	(457)	64 9/16	(1640)	32 3/4	(832)	68 9/16	(1741)	34 3/4	(883)
20	(508)	70 13/16	(1799)	35 15/16	(913)	74 13/16	(1900)	37 15/16	(964)
22	(559)	77 1/8	(1959)	39 1/16	(992)	81 1/8	(2061)	41 1/16	(1043)
24	(610)	83 3/8	(2118)	42 1/4	(1073)	87 3/8	(2219)	44 1/4	(1124)
26	(660)	89 11/16	(2278)	45 3/8	(1153)	93 11/16	(2380)	47 3/8	(1203)
28	(711)	96	(2438)	48 1/2	(1232)	100	(2540)	50 1/2	(1283)
30	(762)	102 1/4	(2597)	51 5/8	(1311)	106 1/4	(2699)	53 5/8	(1362)

NOTE:
Full section denotes 10 sides plus stapling flap.
Half section denotes 5 sides plus stapling flap.
Joining two half sections requires two longitudinal joints.

CLOSURE OF TEN SIDED FIBROUS GLASS DUCT

Longitudinal joints are formed in the same manner as in rectangular ducts.

After stapling, use closure materials listed in Section IV, CLOSURE.

When two half sections are to be joined, it is easiest to make the first joint while the duct board is in flat form. Sections must be tightly butted together before stapling.

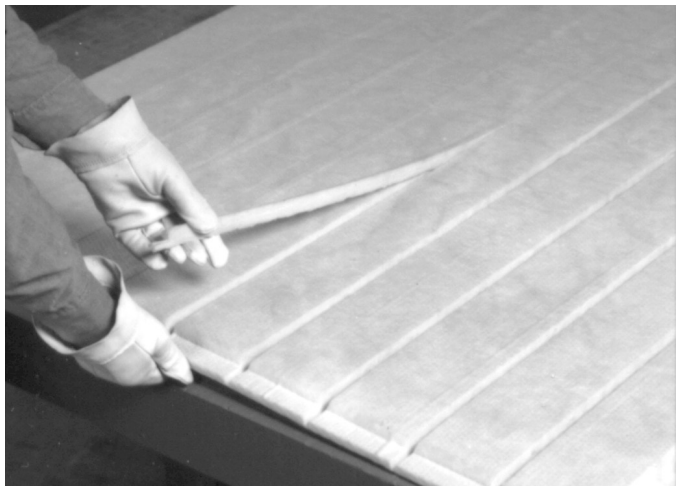

Fig. 3-34A. Removing scrap from grooved duct board.

Fig. 3-34B. Stapling longitudinal joint of ten sided duct.

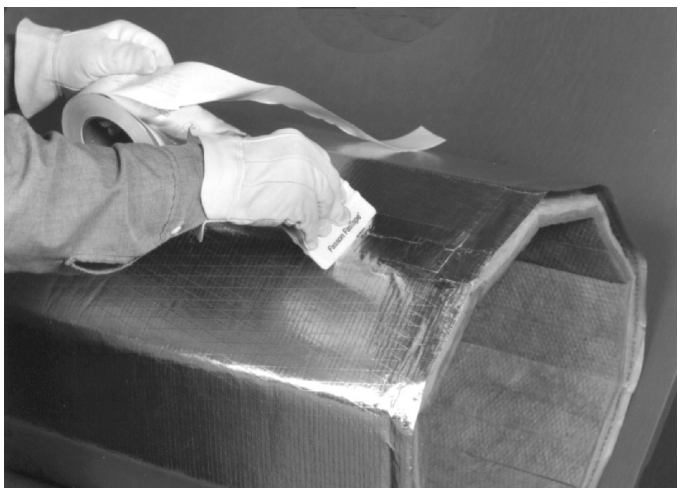

Fig. 3-34C. Taping longitudinal joint of ten sided duct.

SECTION IV

CLOSURE

CLOSURE

Closure systems are a vital element in the proper assembly of fibrous glass duct systems, providing both the structural connection and sealing of seams and joints. Only those closure systems that comply with UL 181A are suitable for use with rigid fibrous glass duct systems. Listed closures include:

- Pressure sensitive aluminum foil tapes listed under UL 181A, Part I (P).
- Heat activated aluminum foil/scrim tapes listed under UL 181A, Part II (H).
- Mastic and glass fabric tape closure systems listed under UL 181A, Part III (M).

Model codes and project specifications require that non-metallic duct construction, which includes fibrous glass ducts, conform to UL 181, Class 1 requirements. Under UL 181A listing procedures, an individual closure system may be qualified for use on all manufacturers' duct boards which meet the UL 181 requirement.

Closure systems may also be qualified under UL 181 by individual duct board manufacturers.

Joint and Seam Preparation

Longitudinal seams are prepared as described on page 2-20. Transverse joints between two duct sections are prepared as described on page 2-21 and as shown in Fig. 4-2A at right.

Staples

Staples shall be:
- galvanized steel
- outward clinching,
- $^1/_2$" (13mm) (minimum length)
- crown width 0.400" (10mm) (min.)
- flat wire, 0.040" x 0.020" (1.02mm x 0.51mm) (min.)

Tape Tabs

When staple flaps are not present, tape tabs of either pressure sensitive or heat activated tapes are used at seams and joints. Tape tabs, made from 8" (203mm) (minimum) lengths of closure tape, are equally spaced on either side of the joint on 12" (305mm) (maximum) centers, with at least one tape tab per side (see Fig. 4-2B). Tape tabs may be placed either over or under the tape closure, or under mastic and glass fabric closures.

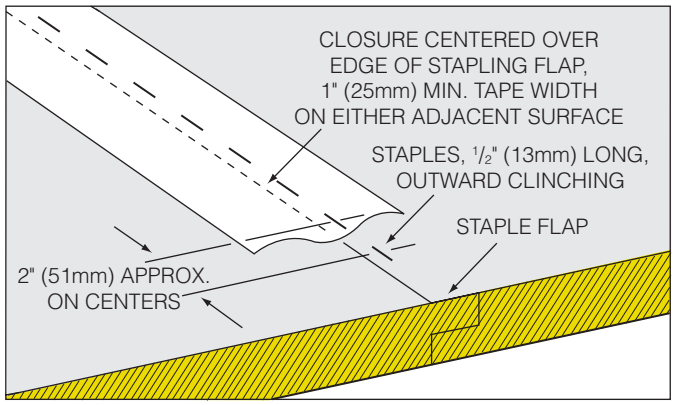

Fig. 4-2A. Joint closure with shiplap and staple flap.

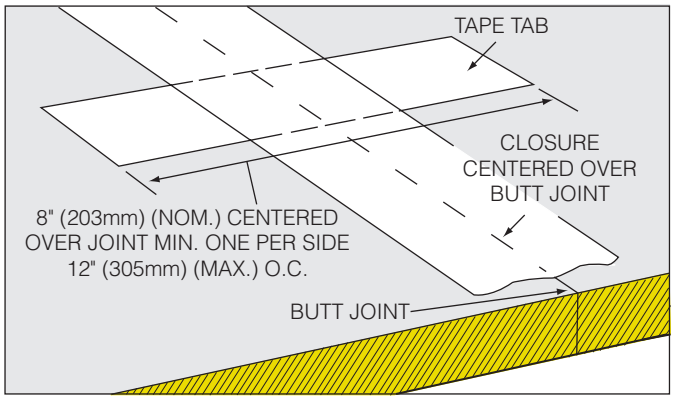

Fig. 4-2B. Joint closure with tape tabs and no staple flap.

Surface Preparation

In order to obtain satisfactory adhesion and bonding, the surface on which closures will be applied must be clean and dry. Dust, dirt, oil, grease, moisture and similar substances may result in adhesion and bonding failure when present. In many cases, wiping the application surface with an oil-free, lint-free rag or paper towel is sufficient. However, for best results on contaminated surfaces, the cleaning recommendations of the tape manufacturer should be consulted.

Shelf Life

Tapes and mastics often have storage requirements and shelf life limitations. The installer should verify that these conditions have not been exceeded prior to use.

APPLICATION OF PRESSURE SENSITIVE ALUMINUM FOIL TAPE CLOSURES

Application above 50°F (10°C):

Use $2^1/_2$" (64mm) (minimum) wide tape for 1" (25mm) duct board. For 11/2" (38mm) duct board, 3" (76mm) wide tape is recommended. For 2" (51mm) duct board, 3" (76mm) wide tape is required. Position the tape along the edge of the flap in a manner that will allow 1" (25mm) (minimum) overlap on adjacent surfaces. While holding the tape taut, press in place taking care to avoid wrinkles and folds. See Fig. 4-3A.

Rub tape firmly with a plastic sealing tool until the facing reinforcement shows through the tape. Avoid excessive pressure on the sealing tool that could cause the tape to be punctured at staple locations. See Fig.4-3B.

Connections to sheet metal:

Pressure sensitive tape may be used to seal fibrous glass ducts to sheet metal in systems operating at less than 1" w.g. (250 Pa) static pressure when the sheet metal surfaces are first carefully cleaned in accordance with tape manufacturer's instructions.

Application below 50°F (10°C):

If the temperature of either the duct board surface or the tape is less than 50°F (10°C) at time of application, heat must be applied.

Using any suitable heating iron with the plate temperature set at approximately 400°F (204°C), pre-heat the area to be taped. Quickly position the tape on the pre-heated area and press in place. Pass the iron two or three times over the taped area using a rapid ironing motion (see Fig. 4-3C).

Complete the bond by rubbing the tape firmly with the plastic sealing tool until the facing reinforcement shows through the tape clearly.

If tape has been stored at temperatures below 50°F (10°C), it may be conditioned prior to use by placing it in a warm environment to improve the initial tack.

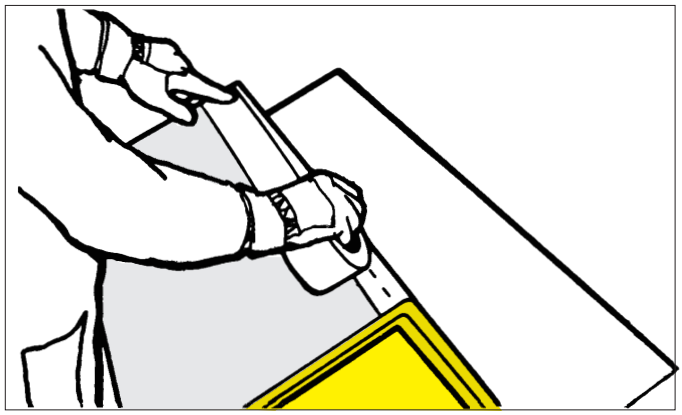

Fig. 4-3A. Applying pressure sensitive aluminum foil tape to longitudinal seam. Hold one end in place firmly and press tape in place, taking care to avoid wrinkles and folds.

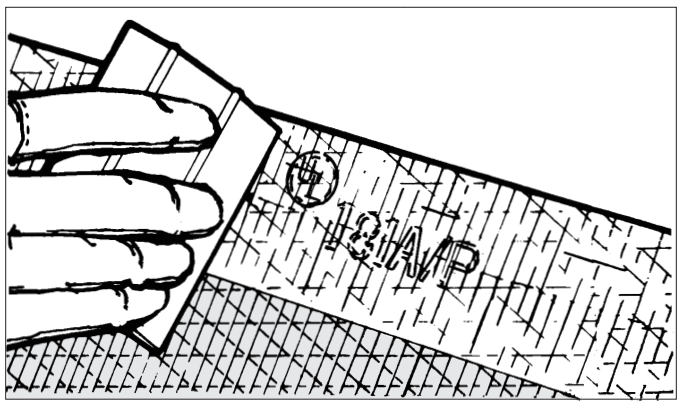

Fig. 4-3B. Rub tape firmly with plastic sealing tool until the facing reinforcement shows clearly through the tape. Avoid tearing or puncturing tape at staples.

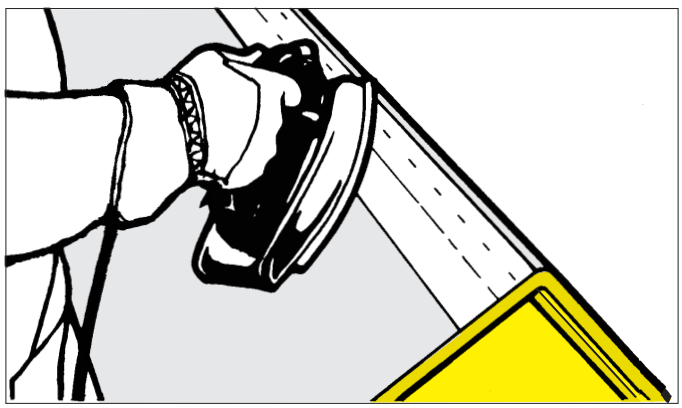

Fig. 4-3C. When applying pressure sensitive tape at temperatures below 50°F (10°C), use iron set at 400°F (204°C) to pre-heat area to be taped, then press tape in place.

APPLICATION OF HEAT ACTIVATED ALUMINUM FOIL TAPE CLOSURES

Position the 3" (76mm) wide tape along the edge of the flap in a manner that will allow a minimum overlap of 1" (25mm) on adjacent surfaces. Using a suitable heating iron with a plate temperature of between 550°F (288°C) and 600°F (316°C), pass the iron along the tape seam with sufficient pressure and dwell time to activate the adhesive (see Fig. 4-4A). A satisfactory bond has been achieved when the heat indicator dots on the tape have darkened (see Fig. 4-4B).

Use a second pass of the iron to complete the bond by applying pressure to the front edge of the iron in a smearing action. Exercise caution to prevent burn injuries from contact with the iron or with heated surfaces.

Allow all joints and seams to cool below 150°F (66°C) surface temperature before any stress is applied. Avoid puncturing the tape at staple locations with excessive pressure from the iron.

Fig. 4-4A. Apply heat with iron. Do not use a blowtorch; both heat and pressure are required for an effective bond. Complete the bond with a second pass of the iron.

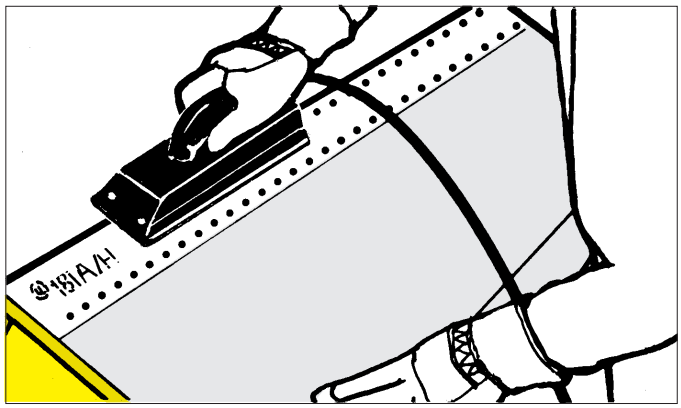

Fig. 4-4B. A satisfactory bond has been achieved when the heat indicator dots on the tape become darkened.

Closure machines:

Automatic closure machines using approved heat activated tape provide tightly sealed longitudinal seam closures at high production rates. Stapling of the longitudinal flap may be omitted.

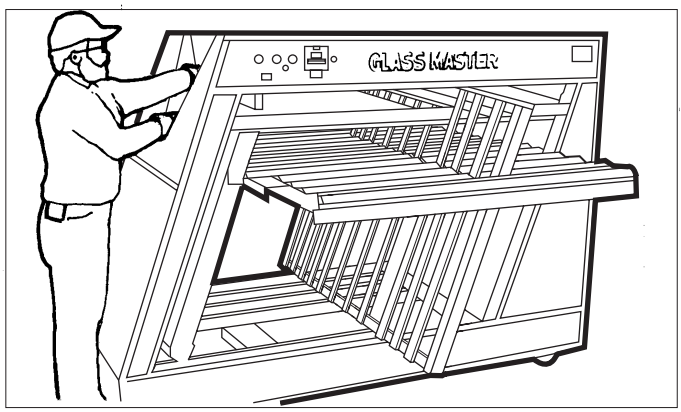

Fig. 4-4C. Closure machines automatically close and seal the longitudinal seam. They can be particularly useful in high volume production.

APPLICATION OF MASTIC AND GLASS FABRIC TAPE CLOSURE SYSTEMS

Apply a thin coat of mastic approximately 3½" (89mm) wide over the center of the seam or 1" (25mm) minimum tape width on each adjacent surface. Embed the 3" (76mm) wide glass fabric in the mastic (see Fig. 4-5A).

Apply a second coat of mastic over the glass fabric, filling the scrim pattern (see Fig. 4-5B).

Follow the mastic manufacturer's label instructions on application rate, safety precautions, shelf life limitations, and minimum set-up time required before stress can be applied to the joint or seam.

Contact mastic manufacturers regarding protection of material during storage, transportation, and installation. Also read and follow instructions on product label.

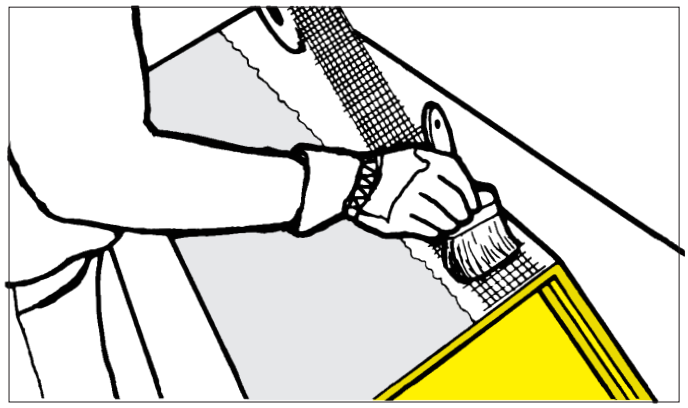

Fig. 4-5A. Apply a thin coat of mastic over the center of the joint seam. Embed glass fabric in mastic.

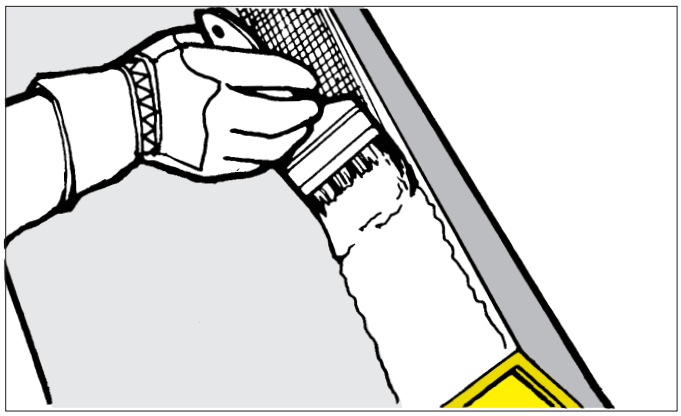

Fig. 4-5B. Apply a second coat of mastic over the glass fabric, filling the scrim pattern.

Glass Fabric and Mastic Over Sheet Metal:

When connecting fibrous glass duct systems to sheet metal, as in connections to flanges of central air equipment, fasteners such as sheet metal screws and washers must be used to carry the mechanical load. Glass fabric and mastic can then be applied to seal the connections at these points. See Fig. 4-5C. Usually, two widths of glass fabric will be required.

See page 3-30 for recommended fibrous glass-to-sheet metal connection details.

NOTE: Either pressure sensitive or heat activated tape tabs may be used in conjunction with glass fabric and mastic closure systems.

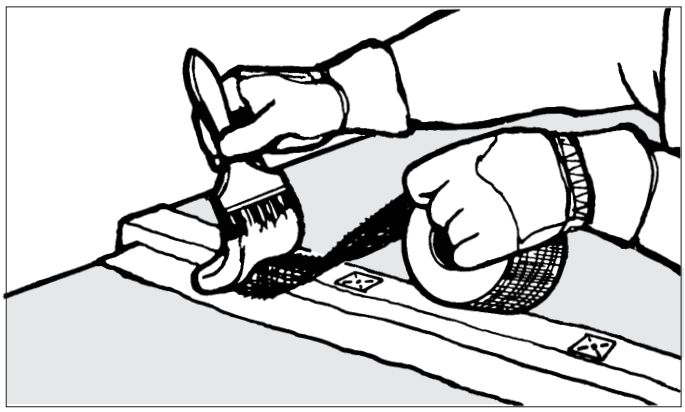

Fig. 4-5C. Glass fabric and mastic are used to seal equipment connections over mechanical fasteners applied to carry the mechanical load.

FLEXIBLE DUCT CONNECTIONS TO DUCT BOARD - CLOSURE STRAP METHOD

1. Cut hole in plenum, duct section, or distribution box with hole cutter sized to accept a sheet metal collar. If using spin-in collar, also cut a 1" (25mm) slit radial to the hole (Fig. 4-6A).

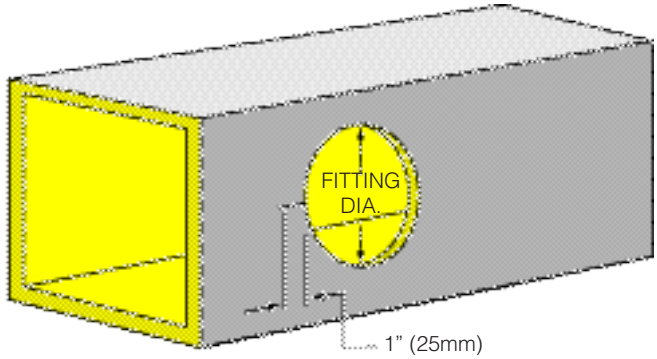

Fig. 4-6A. Cutting hole in duct board for flexible duct connection.

2. To reduce leakage, coat the collar flange with mastic listed under UL 181A, Part III, to seal the collar to the duct board.

3 (a). If using spin-in collar, be sure lead edge of inner flange is bent down at an angle. Install by screwing into duct board until flange is snugly sealed against duct board facing and entire inner ring is visible inside duct. See Fig. 4-6B.

3 (b). If using dove-tail collar, install by pushing into duct board until flange is snugly sealed against duct board facing. Bend all tabs 90° to lock the collar in place. See Fig. 4-6C.

4. Pull inner air core of flexible duct over collar. Seal with UL181B tape and clamp per flexible duct manufacturers' recommendations. See Fig. 4-6D.

5. Pull flexible duct insulation over inner air core so it is butted firmly against duct wall (Fig. 4-6E). Complete installation of flexible duct to collar in accordance with manufacturer's instructions.

For additional information on connecting flexible duct to fibrous glass duct board, refer to Air Diffusion Council Flexible Duct Performance & Installation Standards and manufacturers' instructions.

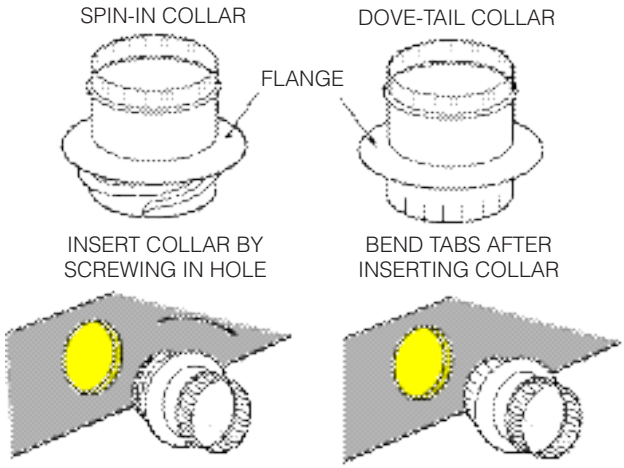

Fig. 4-6B. Installing spin-in collar.

Fig. 4-6C. Installing dove-tail collar.

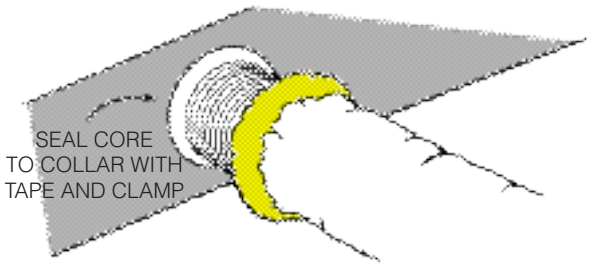

Fig. 4-6D. Installing flexible duct over collar.

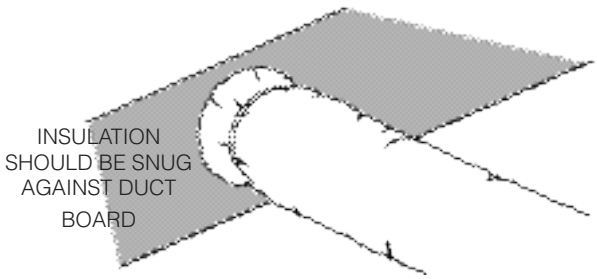

Fig. 4-6E. Install flexible duct to collar according to manufacturer's instructions.

FLEXIBLE DUCT CONNECTIONS TO DUCT BOARD - INSULATED COLLAR METHOD

1. From a 1" (25mm) piece of duct board, cut a ring whose inside diameter is the same as that of the sheet metal collar and whose outside diameter gives a thickness that corresponds to the R-value of the flexible duct insulation as follows:

INSIDE DIAMETER PLUS:	FLEXIBLE DUCT R-VALUE
2" (51mm)	4.2 (0.74 RSI)
3" (76mm)	6.0 (1.06 RSI)
4" (102mm)	8.0 (1.41 RSI)

2. Slide ring onto sheet metal collar with foil facing of duct board away from flange. Tape to back of flange with UL181A listed pressure sensitive tape (see Fig. 4-7A).

3. Cut hole in duct board to accommodate sheet metal collar. If using spin-in collar (see page 4-6), cut 1" (25mm) slit radial to hole (see Fig. 4-6A). To reduce leakage, coat the collar flange with mastic listed under UL 181A, Part III to seal the collar to the duct board facing.

4. If installing dove-tail collar, push into hole in duct board until outer flange is snug against facing. Bend dove-tails 90° outward to lock in place (see Fig. 4-7B).

5. If installing spin-in collar, bend leading edge of inner flange down at an angle and slip through slit in duct board. Screw collar into place with outer flange snug against foil facing and inner ring fully visible inside duct.

6. Pull inner air core of flexible duct over collar. Seal with UL181B tape and secure with closure strap between bead on collar and duct board (see Fig. 4-7B).

7. Butt flexible duct insulation firmly against duct board ring (Fig. 4-7C). Pull flexible duct vapor retarder jacket over ring so it covers about one half the width of ring.

8. Tape jacket to ring using UL181B tape (Fig. 4-7D).

This procedure maintains full thickness of insulation across the flexible duct connection, minimizes through-metal conductance of the sheet metal fitting, and completes the vapor retarder across the connection to prevent moisture condensation.

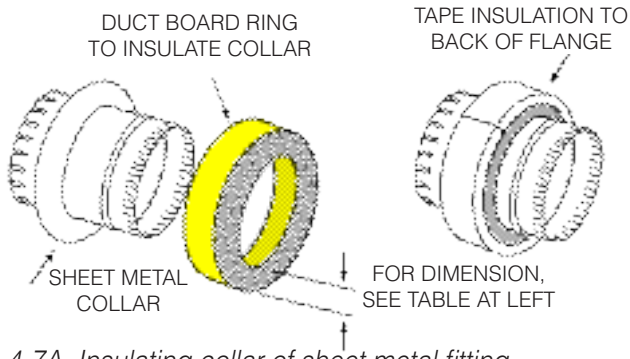

Fig. 4-7A. Insulating collar of sheet metal fitting.

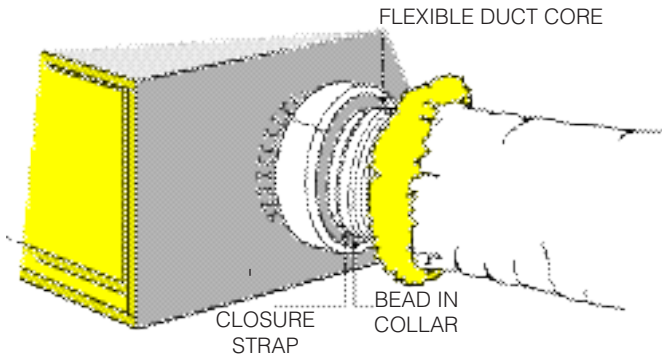

Fig. 4-7B. Securing flexible duct with plastic strap.

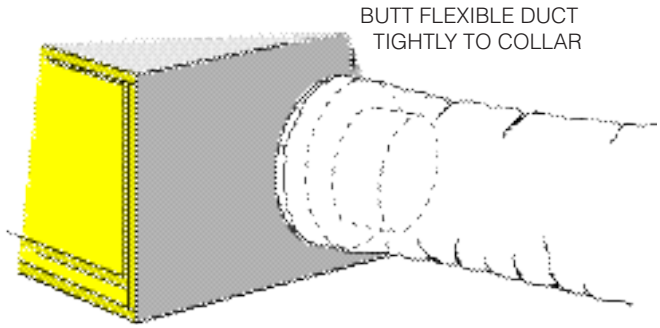

Fig. 4-7C. Positioning flexible duct insulation and vapor retarder jacket against insulated collar.

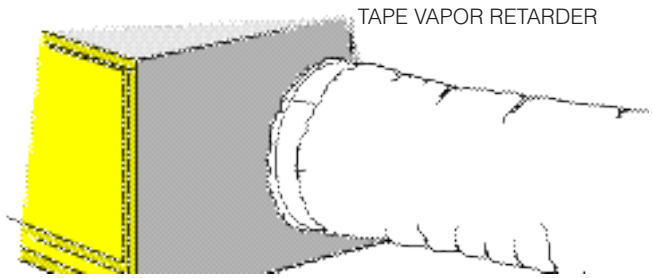

Fig. 4-7D. Taping flexible duct jacket to collar.

SECTION V

REINFORCEMENT

NOTES TO SECTION V

1. FASTENER SCHEDULE:

- #10 plated sheet metal screws, board thickness + $^1/_4$" (6mm), thread length (min.)

- Volcano type washers, $2^1/_2$" (64mm) square or 3" (76mm) round galvanized steel, 0.028 (0.71mm) thick.

- When installing washers, turned edges must face away from board surface, spacing as indicated in Section V.

2. REINFORCEMENT OF FITTINGS:

Some fittings may require reinforcement even though straight ducts of the same span may not require reinforcement.

INTRODUCTION

When internal static pressure loading may cause deflection greater than one one-hundredth of span in fibrous glass duct systems, reinforcement is required. For deflection limits and criteria for evaluation of system integrity, refer to Section I, *Performance Criteria of Duct Board*.

Fibrous glass duct system straight sections and fittings may be reinforced by either or both of the following methods:

1. Tie rod reinforcement (see pages 5-3 through 5-7). Tie rods of 12 gauge steel, terminating in square or round steel washers, restrain duct board deflection to within 1/100 of span in positive pressure systems when duct dimensions require reinforcement. Washer size and tie rod location must be maintained to prevent facing rupture over system cycling.

2. Channel reinforcement (see pages 5-8 through 5-13). Sheet metal channels wrap entirely around the duct to restrain duct board deflection. Channel reinforcement may be used in positive pressure systems, and must be used in negative pressure systems, when duct dimensions require reinforcement.

Tie rod and channel reinforcement may be combined in reinforcing certain fittings. See pages 5-13 thru 5-24.

Positive Pressure Reinforcement

The following general rules apply:

1. While some duct dimensions may not require any reinforcement in straight sections, certain fittings of the same dimension may require reinforcement. This requirement is noted wherever applicable in the instructions that follow.

2. Reinforcement of fibrous glass duct fittings is an extension of certain basic principles of reinforcing straight duct sections, by use of tie rods wherever possible and with channel reinforcement applied where tie rods cannot be used.

3. The reinforcement spacing required for straight duct sections of a given dimension will be required for duct fittings of that dimension.

4. If the duct section or fitting has shiplapped joints, reinforcements must be located starting within 4” (102mm) of the shiplap on the female side.

5. If the duct or fitting must be reinforced and has butt joints, refer to page 5-5 for details.

6. Use only tie rod termination methods described in this Standard for low pressure (0 to 2 inches w.g. [0 to 500 Pa]) duct systems, noting limitations which preclude the use of certain tie rod termination methods with certain fittings. See page 5-7.

7. Use only formed sheet metal reinforcement materials and configurations as shown on the following pages. Channel reinforcement sheet metal shall be of gauge as listed in Table 5-4, page 5-8.

8. When a panel is to be cut into the system, additional reinforcement shall be used.

9. Reinforcement locations shall not interfere with the operation of the system controls or equipment.

10. If the branch connection is less then full height, the distance from any side of the branch to the top or the bottom of the duct must be a minimum of 6” (152 mm). In addition, the distance from the male or female shiplap must be a minimum of 6” (152 mm). This also applies to access doors.

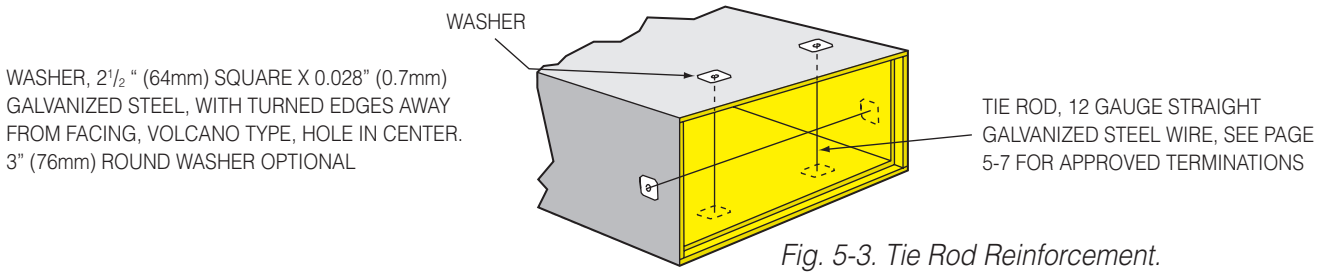

Fig. 5-3. Tie Rod Reinforcement.

TABLE 5-1. TIE ROD REINFORCEMENT SCHEDULE - POSITIVE PRESSURE ONLY

Maximum Positive Static Pressure	Inside Duct Dim., Inches	Type 475 Duct Board			Type 800 Duct Board			Type 1400 Duct Board		
		No.Rods Across Dimension	Maximum Longitud. Spacing	No.Rods Per 4 ft. Section	No.Rods Across Dimension	Maximum Longitud. Spacing	No.Rods Per 4 ft. Section	No. Rods Across Dimension	Maximum Longitud. Spacing	No. Rods Per 4 ft. Section
0 thru ½ in. w.g. (0 - 124 Pa)	0" -36"	*			*			*		
	37"-42"	2	24"	4	2	48"	2	*		
	43"-48"	2	24"	4	2	48"	2	2	48"	2
	49"-60"	3	24"	6	3	48"	3	3	48"	3
	61"-64"	3	24"	6	3	24"	6	3	48"	3
	65"-80"	4	24"	8	4	24"	8	4	48"	4
	81"-96"	5	24"	10	5	24"	10	5	48"	5
Over ½ thru 1 in. w.g. (125 - 249 Pa)	0"-24"	*			*			*		
	25"-30"	1	24"	2	1	48"	1	*		
	31"-32"	1	24"	2	1	24"	2	*		
	33"-36"	2	24"	4	2	24"	4	*		
	37"-48"	2	24"	4	2	24"	4	2	48"	2
	49"-64"	3	24"	6	3	24"	6	3	24"	6
	65"-80"	4	24"	8	4	24"	8	4	24"	8
	81"-96"	5	24"	10	5	24"	10	5	24"	10
Over 1 thru 2 in. w.g. (250 - 500 Pa)	0"-15"	*			*			*		
	16"-18"	1	24"	2	*			*		
	19"-24"	1	24"	2	1	48"	1	*		
	25"-32"	1	16"	3	1	24"	2	1	24"	2
	33"-48"	2	16"	6	2	24"	4	2	24"	4
	49"-60"	3	16"	9	3	24"	6	3	24"	6
	61"-64"	3	16"	9	3	16"	9	3	24"	6
	65"-80"	4	16"	12	4	16"	12	4	24"	8
	81"-96"	5	16"	15	5	16"	15	5	24"	10

*Straight ducts of these dimensions do not require reinforcement. However, fittings of these dimensions may require reinforcement.

NOTES:
1. Tie rods and washers must be no more than 16" (406mm) on centers across duct dimension.
2. Ducts of 48" (1219mm) width and over require use of anti-sag devices. See pages 5-4 and 5-5.
3. For duct dimensions over 96" (2438mm), maintain tie rod spacing on 16" (400mm) centers across the duct dimension following longitudinal spacing for the design pressure and sag support 48" o.c.
4. If dimensions require, tie rods run in both horizontal and vertical directions.

To convert inches to millimeters in the above table multiply by 25.4.
To convert feet to meters in the above table multiply by .3048.

Placement of Tie Rod Reinforcement in Relation to Shiplapped Joints

Washers shall be installed so turned edges face away from the duct board facing. See page 5-5 for reinforcement of butt joints in duct board.

Tie Rod Distance from the shiplap edge:

- The closest a tie rod can be placed to the shiplap edge to allow clearance for tape closure.

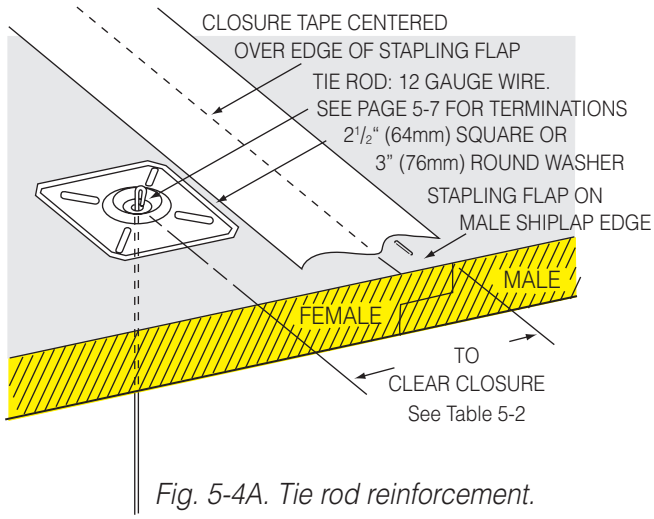

Fig. 5-4A. Tie rod reinforcement.

Table 5-2 SHIP LAP WASHER SPACING

	Distance from A to B (nominal)	
Board Thickness	Square Washer	Round Washer
1" (25mm)	4" (102mm)	4-1/4" (106mm)
1-1/2" (38mm)	5" (127mm)	5-1/4" (131mm)
2" (51mm)	5-1/2" (140mm)	5-3/4" (143mm)

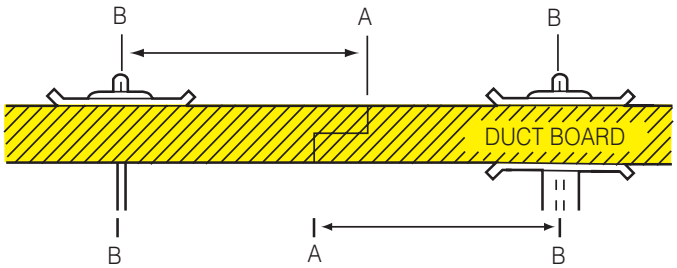

Sag Control — Tie Rod Reinforcement, Shiplapped Joints

Top panels of fibrous glass duct sections or fittings 48" (1219mm) wide or greater may sag due to the weight of the duct board when the system is not pressurized. To control this condition, sag supports must be provided. Hanger or sag supports shall not sit on reinforcements.

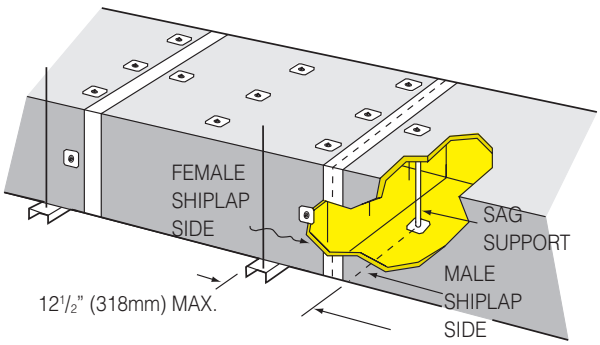

Fig. 5-4B. Sag control, tie rod reinforcement.

See Table 5-2

Sag supports do not replace tie rod assemblies as called for in the reinforcement schedule, but must be installed in addition to them. Hangers must be located within 12" (305mm) of sag supports (see Section VI).

For easier mating of fittings and duct sections during installation, a ½" (13mm) diameter steel conduit such as EMT, and washers may be added to an existing tie rod assembly at the female shiplap end. See Table 5-2.

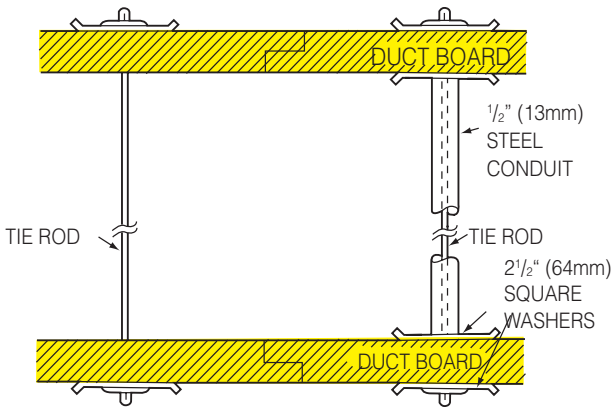

Fig. 5-4C. Sag control detail.

Placement of Tie Rod Reinforcement in Relation to Butt Joints

Reinforcement techniques presented in this manual assume fibrous glass duct system components have been fabricated with shiplap joints. When butt joints are to be reinforced, use the method shown on this page.

Alternate: A single tie rod reinforcement, placed as shown in Fig. 5-4B, page 5-4, may be used if the butt joint is glued with an adhesive system documented by the duct board manufacturer.

See Section IV, CLOSURES, for correct procedures to be used in taping butt joints.

Tie Rod Distance from the shiplap edge:

- The closest a tie rod can be placed to the shiplap edge to allow clearance for tape closure.

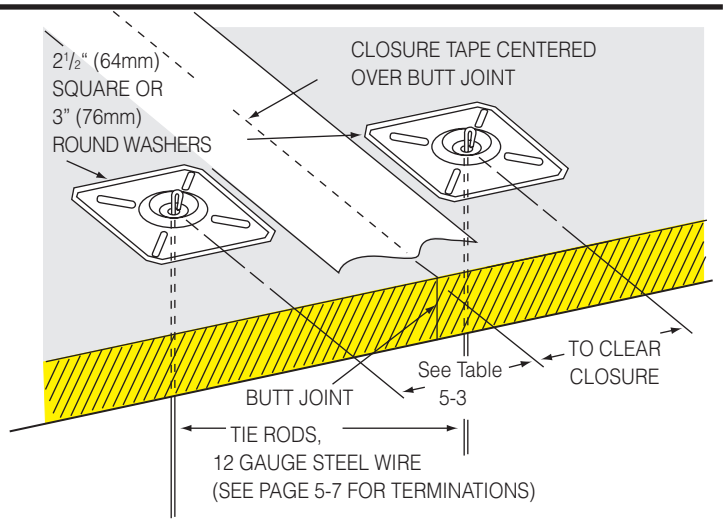

Fig. 5-5A. Butt joint reinforcement with tie rods and washers.

Table 5-3 BUTT JOINT WASHER SPACING

	Distance from A to B (nominal)	
Board Thickness	Square Washer	Round Washer
1" (25mm)	3" (76mm)	3-1/4" (83mm)
1-1/2" (38mm) and 2" (51mm)	3-1/4" (83mm)	3-1/2" (89mm)

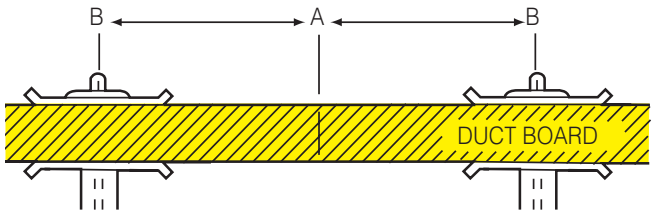

Sag Control — Tie Rod Reinforcement, Butt Joints

Top panels of fibrous glass sections or fittings 48" (1219mm) wide or greater may sag due to the weight of the duct board when the system is not pressurized. To control this condition, sag supports must be provided on both sides of the butt joint, using 2½" (64mm) square or 3" (76mm) round washers and ½" (13mm) steel conduit added to standard tie rods inside the duct. Hanger or sag supports shall not sit on reinforcements.

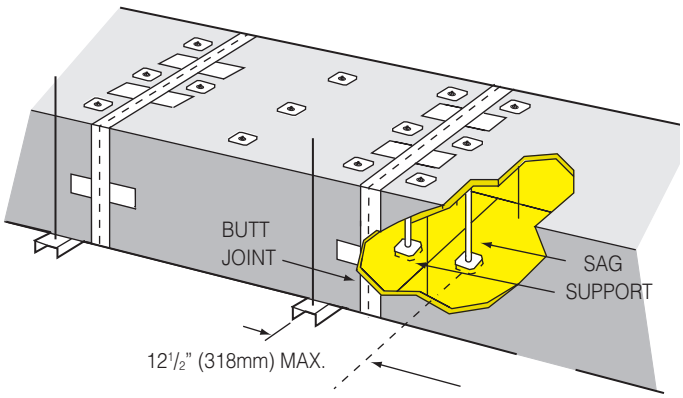

Fig. 5-5B. Sag control - butt joint reinforcement.

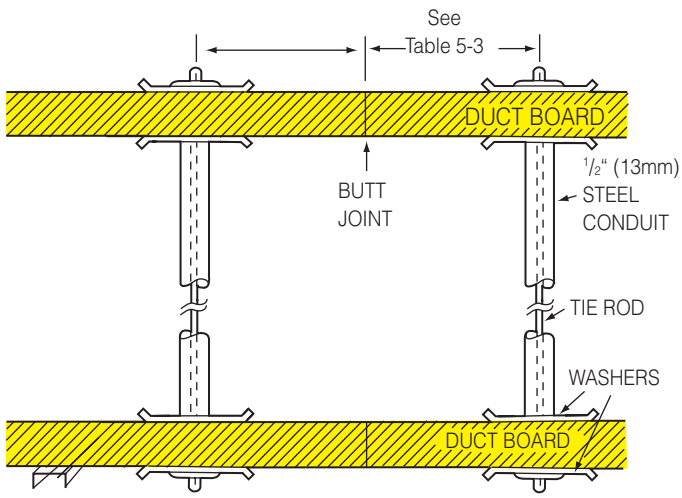

Fig. 5-5C. Sag control detail.

Typical Tie Rod Reinforcement Examples, Positive Pressure Ducts

See page 5-4 for placement of tie rods and sag support in relation to shiplapped joints. Sag support is required in ducts 48" (1219mm) and greater in width.

The number of tie rods across the duct width shall be as required in the schedule, Table 5-1.

If depth of duct requires reinforcement, horizontal tie rods are used according to schedule, Table 5-1.

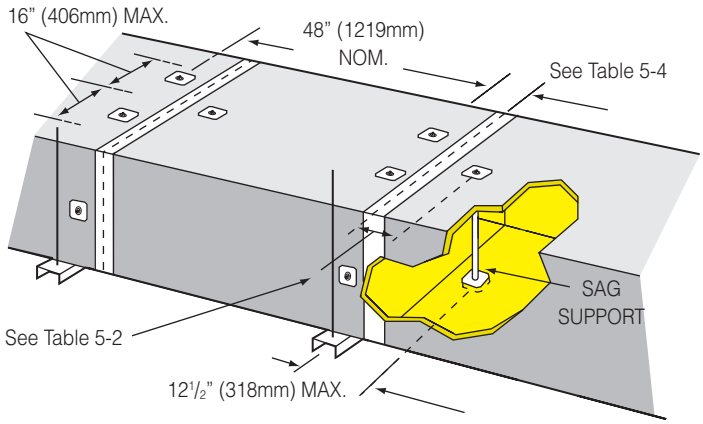

Fig. 5-6A. Tie rod reinforcement, 48" (1219mm) centers, 48" (1219mm) duct modules.

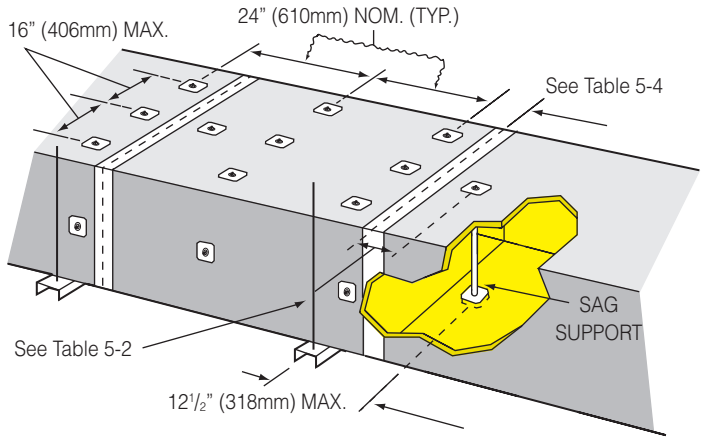

Fig. 5-6B. Tie rod reinforcement, 24" (610mm) centers, 48" (1219mm) duct modules.

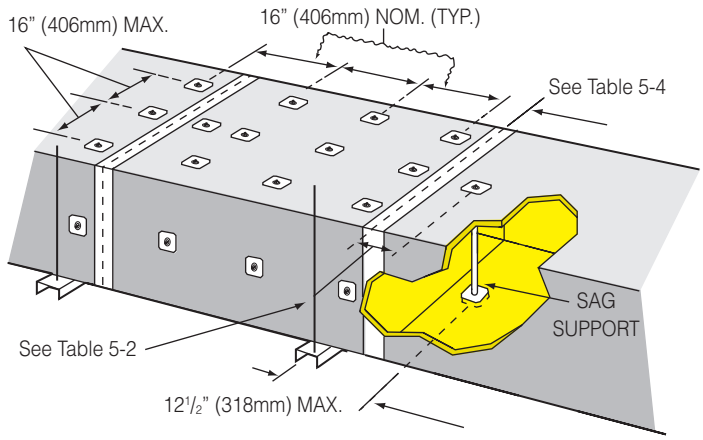

Fig. 5-6C. Tie rod reinforcement, 16" (406mm) centers, 48" (1219mm) duct modules.

TIE ROD TERMINATION METHODS

1. Fasloop Method - Tools Required:

- Fasloop bending tool* or tool with equivalent performance
- Wire cutter to make square cut (not chisel point)
- Tape measure

Materials Required per tie rod assembly:

- 12 gauge galvanized steel wire $1^3/_4$" (44mm) longer than outside duct dimension
- Two washers, $2^1/_2$" (64mm) square x 0.028" 0.7mm) (min.) thick galvanized steel, volcano type with beveled edges and 0.150" (4mm) hole in center. 3" (76mm) round washers are acceptable. NOTE: Other types of manufactured flat washers are not suitable for this application. *No other size or shape of loop has been tested by NAIMA, or submitted to NAIMA for testing, to determine compliance with the 50,000 cycle test.

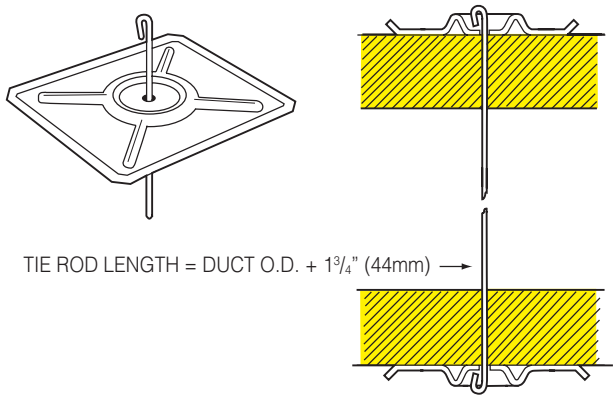

Fig. 5-7A. Tie rod termination, Fasloop style.

2. Pop Rivet Method - Tools Required:

- 14" (356mm) horseshoe nipper or carpenter's pincers, modified so pincers will close to a gap equal to 18 gauge sheet metal. IMPORTANT: Check tool periodically to ensure that this gap dimension is maintained.
- Wire cutter
- Tape measure

Materials Required per tie rod assembly:

- 12 gauge galvanized steel wire, cut exactly to outside duct dimension
- Two washers, $2^1/_2$" (64mm) square x 0.028" (0.7mm) (min.) thick galvanized steel, with beveled edges and $^7/_{32}$" (6mm) diameter center hole
- Two $^3/_{16}$" (4.8mm) steel pop rivet sleeves, $^3/_8$" (10mm) long

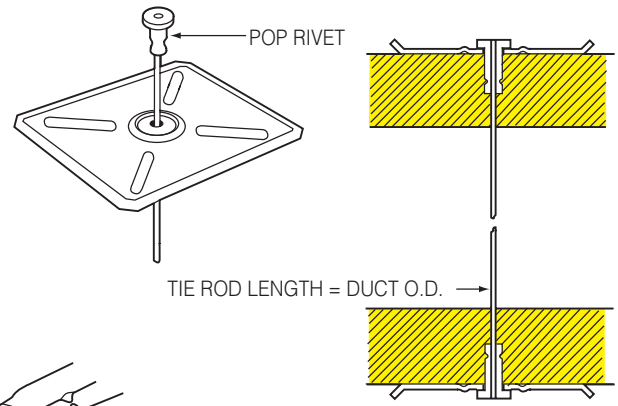

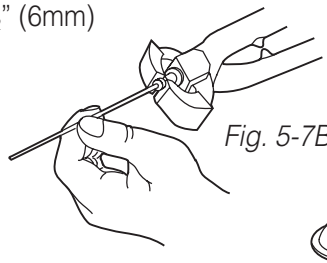

Fig. 5-7B. Tie rod termination, pop rivet and sleeve.

3. Locking Cap Method - Tools Required:

(Not to be used on sloped panels of fittings)

- Wire cutters
- Tape measure

Materials Required per tie rod assembly:

- 12 gauge galvanized steel wire, cut $^7/_{16}$" (11mm) longer than outside duct dimension
- Two washers, $2^1/_2$" (64mm) square x 0.028" (0.7mm) (min.) thick galvanized steel, with beveled edges and 0.150" (3.8mm) hole in center.
- Two locking caps, $^7/_8$" (22mm) diameter, having spring steel or stainless steel locking inserts

NOTES:

(a) An ordinary insulation locking washer does not have sufficient holding power.
(b) Wire must be free to move within the $2^1/_2$" (64mm) square washer.
(c) Do **not** re-use locking caps.

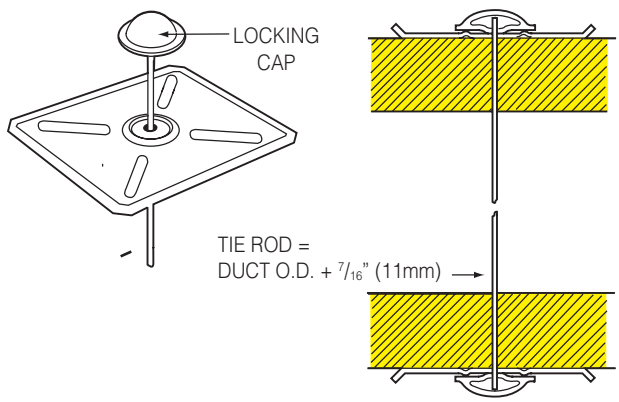

Fig. 5-7C. Tie rod termination with locking cap.

CHANNEL REINFORCEMENT

Another reinforcement system, for use in either positive or negative pressure duct systems, specifies formed sheet metal channels normally wrapped around the perimeter of the duct. When channels must be attached to the duct, #10 plated screws and 2½" (64mm) square or 3" (76mm) round, 0.028" (0.7mm) (min.) thick galvanized steel washers are used. These must have turned edges to prevent cutting into the duct board. In positive pressure applications, wrap-around channels need not be attached to the duct board except when required for sag control.

Table 5-4 gives reinforcement longitudinal spacing, sheet metal gauge, and channel height dimensions depending on the duct board type, maximum inside dimensions and static pressure. This is a minimum reinforcement schedule applying to straight sections, and generally applies to fitting reinforcement as shown in this Standard. However, a simplified reinforcement schedule may be established with lower variables provided minimum reinforcement sizes, gauges and spacings as shown below are met.

TABLE 5-4. CHANNEL REINFORCEMENT SCHEDULE, POSITIVE OR NEGATIVE PRESSURE

Maximun Static Pressure	Inside Duct Dim., Inches	Type 475 Duct Board			Type 800 Duct Board			Type 1400 Duct Board		
		Channel Gauge	Maximum Longitud. Spacing	H Dimension (see below)	Channel Gauge	Maximum Longitud. Spacing	H Dimension (see below)	Channel Gauge	Maximum Longitud. Spacing	H Dimension (see below)
0 thru -½" w.g. (0 - 124 Pa)	0"- 30"	*			*			*		
	31"-36"	22	24"	1"	22	48"	1"	*		
0 thru +½" w.g. (0 - 124 Pa)	0"- 36"	*			*			*		
	37"-42"	22	24"	1"	22	48"	1"	*		
	43"-48"	22	24"	1"	22	48"	1"	22	48"	1"
	49"-60"	22	24"	1"	22	48"	1½"	22	48"	1"
	61"-72"	22	24"	1"	22	24"	1"	18	48"	1"
	73"-84"	22	24"	1"	22	24"	1"	18	48"	1¼"
	85"-96"	22	24"	1¼"	22	24"	1"	18	48"	1½"
Over ½" thru 1" w.g. (125-249 Pa) positive or negative	0"-24"	*			*			*		
	25"-30"	22	24"	1"	22	48"	1"	*		
	31"-36"	22	24"	1"	22	24"	1"	*		
	37"-42"	22	24"	1"	22	24"	1"	22	48"	1"
	43"-48"	22	24"	1"	22	24"	1"	22	48"	1¼"
	49"-60"	22	24"	1"	22	24"	1"	22	24"	1"
	61"-72"	18	24"	1"	18	24"	1"	18	24"	1"
	73"-84"	18	24"	1¼"	18	24"	1¼"	18	24"	1"
	85"-96"	18	24'	1¼"	18	24"	1¼"	18	24"	1¼"
Over 1" thru 2" w.g. (250-500 Pa) positive or negative	0"-15"	*			*			*		
	16"-18"	22	24"	1"	*			*		
	19"-24"	22	24"	1"	22	24"	1"	*		
	25"-36"	22	16"	1"	22	24"	1"	22	24"	1"
	37"-48"	22	16"	1"	22	24"	1¼"	22	24"	1"
	49"-60"	22	16"	1"	22	24"	1¼"	22	24"	1¼"
	61"-72"	18	16"	1"	18	16"	1"	18	24"	1¼"
	73"-84"	18	16"	1¼"	18	16"	1¼"	18	24"	1½"
	85"-96"	18	16"	1½"	18	16"	1½"	18	24"	1¾"

NOTE: Ducts of 48" (1219mm) width and over require use of anti-sag devices.
See Detail A, page 5-10
To convert inches to millimeters in the above table multiply by 25.4.
To convert feet to meters in the above table multiply by .3048.

*Straight ducts of these dimensions do not require reinforcement although fittings of these dimensions may require reinforcement.

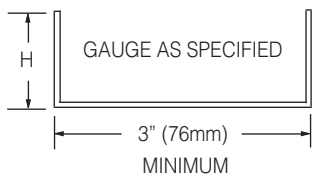

Channel Reinforcement for Positive Pressure Ducts

Each reinforcement may be fabricated from a continuous length of channel having three 90° bends and a fourth 90° corner which is securely fastened with bolts, screws, rivets, spotwelds or staples. Reinforcements may also be fabricated with two, three, or four securely fastened corners.

When the duct is 48" (1219mm) wide or greater, channels are secured to the top for sag support with #10 plated sheet metal screws and square or round washers.

Where wrap-around channels without sag support are used, the channel should be slipped over the closure tape after the tape is applied. Center channel over female shiplap end for maximum support. See Fig. 5-9A. See Table 5-4 for appropriate channel gauge and profile.

To determine length of reinforcing member:

If a single length is to be formed to wrap entirely around the duct, its length must be the outside duct perimeter plus twice the height H of the channel. If the reinforcing member is to be two-piece, each piece must be equal in length to the outside duct width plus the outside duct height plus twice the height H of the channel.

A channel may be offset to clear closure. See Fig. 5-9C. If sag support is not required, channel may be centered over joint as shown in Fig. 5-9A.

Channel Distance from the shiplap edge:

- The closest a tie channel edge can be placed to the shiplap edge to wallow clearance for tape closure.

Table 5-5

Board Thickness	Distance from Shiplap to Channel Edge
1" (25mm)	2-1/2" (64mm)
1-1/2" (38mm)	3-1/2" (89mm)
2" (51mm)	4" (102mm)

Note: 1-1/2" and 2" (38 and 51 mm) distance is set to allow clearance for 3" (76 mm) tape.

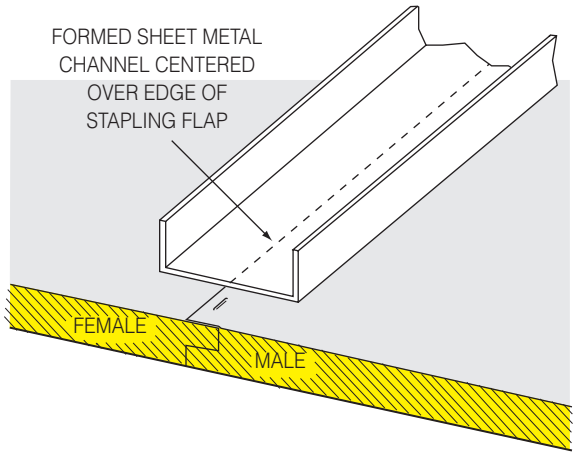

Fig. 5-9A. Channel reinforcement, positive pressure systems.

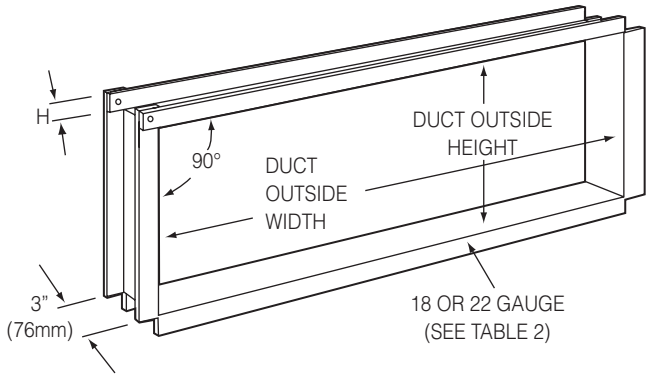

Fig.5-9B. Detail of channel reinforcement.

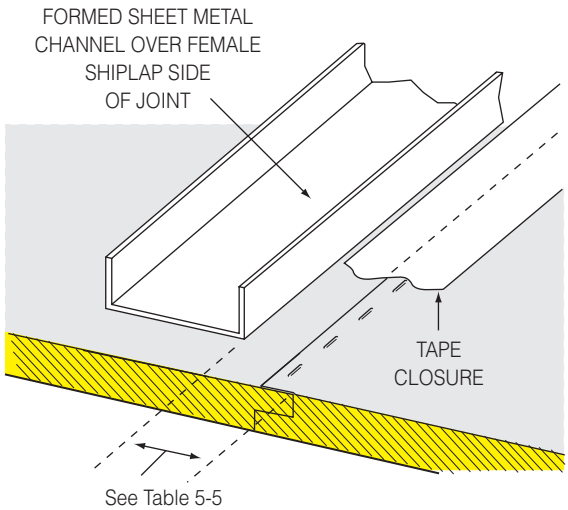

Fig. 5-9C. Channel reinforcement offset to clear closure.

Typical Channel Reinforcement Examples, Positive Pressure Ducts

See page 5-9 for placement of channel reinforcement in relation to shiplapped joints. The number of channels along the duct shall be as shown in Table 5-4.

For sag support in ducts 48" (1219mm) or greater in maximum dimension, each reinforcement must be fastened to top of duct in mid-span. See Detail Ⓐ.

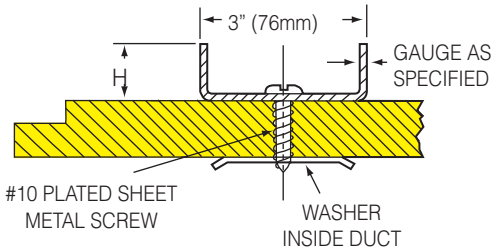

DETAIL Ⓐ

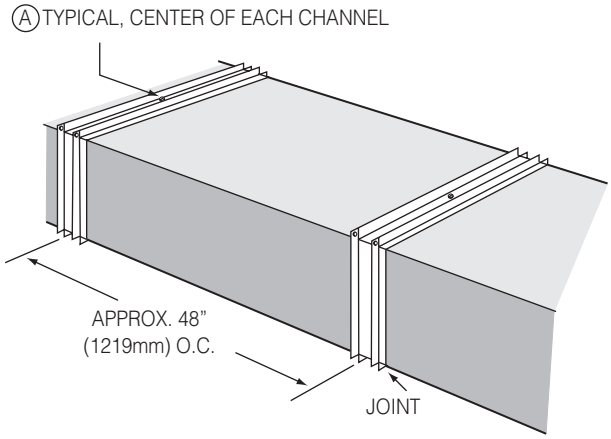

Fig. 5-10A. Channel reinforcement, approx. 48" (1219mm) on centers, 48" (1219mm) duct modules.

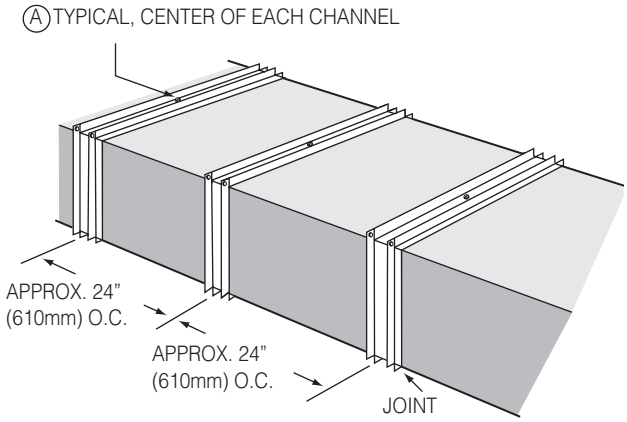

Fig. 5-10B. Channel reinforcement, approx. 24" (610mm) on centers, 48" (1219mm) duct modules.

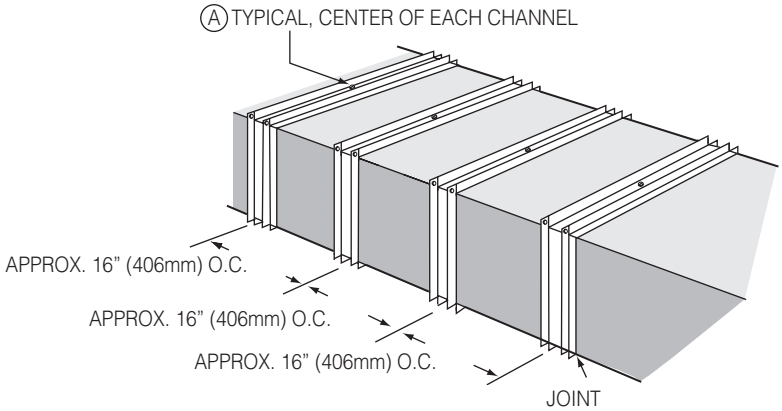

Fig. 5-10C. Channel reinforcement, approx. 16" (406mm) on centers, 48" (1219mm) duct modules.

Negative Pressure Channel Reinforcement

Locating reinforcing channels:

In negative pressure applications, reinforcement is applied over male shiplap. These arrangements are important and, if not followed as shown, may result in system failure. When additional channels are required, as with 24" (610mm) and 16" (406mm) (approx.) spacing, they are attached to the duct with #10 plated sheet metal screws and square or round washers. See Detail (A), page 5-10.

Channel Distance from the shiplap edge:

- The closest a tie channel edge can be placed to the shiplap edge to allow clearance for tape closure.

Table 5-6A

Board Thickness	Distance from Shiplap to Channel Edge
1" (25mm)	1-1/2" (38mm)
1-1/2" (38mm)	2" (51mm)
2" (51mm)	2-1/2" (64mm)

Note: 1-1/2" and 2" (25 and 51 mm) distance is set to allow clearance for 3" (76 mm) tape.

To make it easy to fasten channels to duct board, thread and strip screws into channel first. Position channel in proper location on duct section and push screws through duct board. Then use a powered driver to thread screws into washers or clips. Finally, fasten at corners.

Clips or washers in negative pressure systems (Figure 5-6B): Clips are spaced not more than 16" (406mm) apart and not more than 16" (406mm) from the longitudinal edge of a duct side. See Table 5-7 below.

Table 5-6B

Board Thickness	Clip Length
1" (25mm)	6" (152mm)
1-1/2" (38mm)	6-1/2" (165mm)
2" (51mm)	7" (178mm)

Construction details:

Each reinforcement may be fabricated from a continuous length of channel having three 90° bends and a fourth 90° corner which is securely fastened with bolts, screws, rivets, spotwelds or staples. Reinforcements may also be fabricated with two, three, or four securely fastened corners.

To determine length of reinforcing members, see page 5-9.

TABLE 5-7. NO. ATTACHMENTS PER REINFORCEMENT	
Transverse dimension	**Minimum no. of attachments**
16"- 32" (406-813mm)	1
33"- 48" (838-1210mm)	2
49"- 64" (1245-1626mm)	3
65"- 80" (1651-2037mm)	4
81"- 96" (2057-2438mm)	5

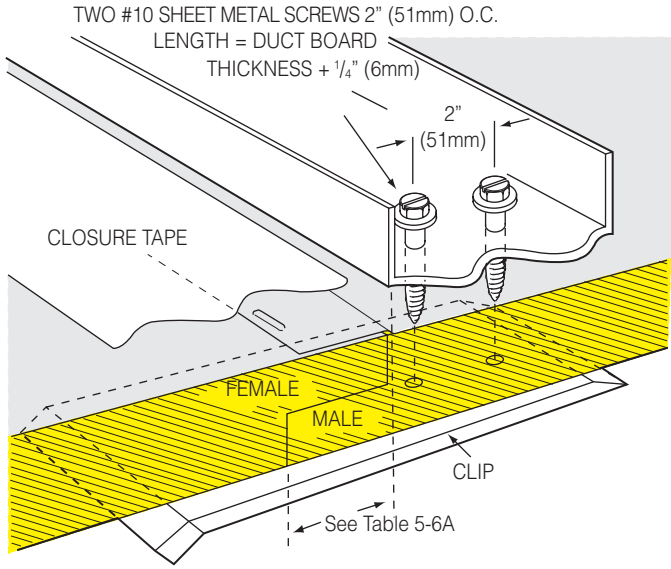

Fig. 5-11A. Channel reinforcement, negative pressure systems.

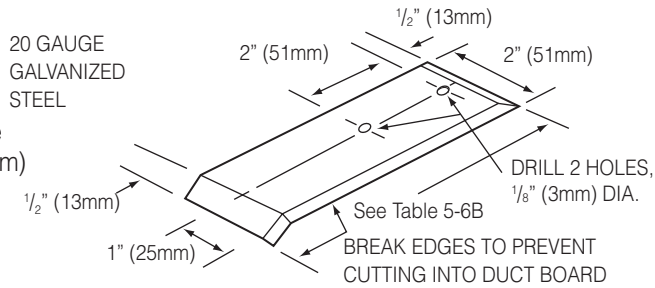

Fig. 5-11B. Clip detail, negative pressure reinforcement.

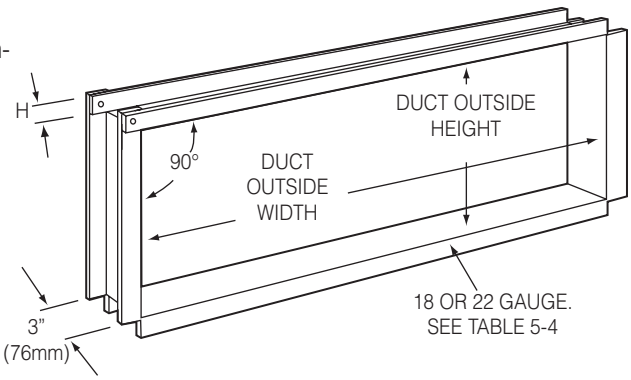

Fig. 5-11C. Channel detail, negative pressure reinforcement.

Typical Channel Reinforcement Schedules, Negative Pressure Ducts

See page 5-11 for placement of channel reinforcement in relation to shiplap joint in negative pressure duct systems. The number of channels along the duct shall be as required in the schedule, Table 5-4.

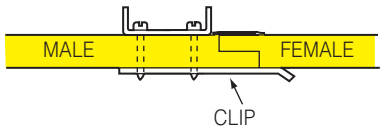

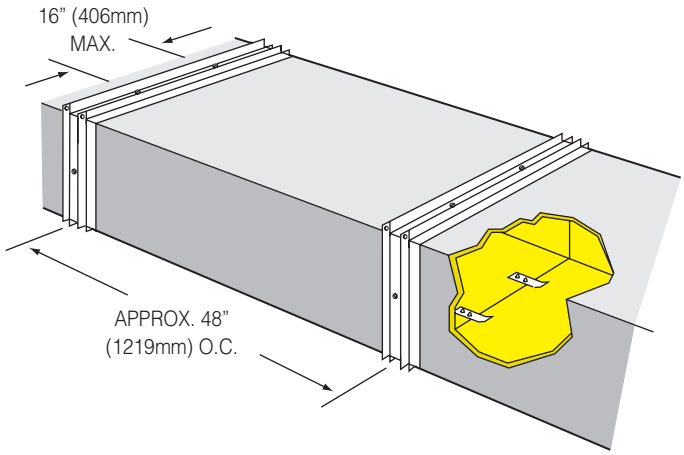

Fig. 5-12A. Channel reinforcement, 48" (1219mm) (approx.) centers, 48" (1219mm) duct modules.

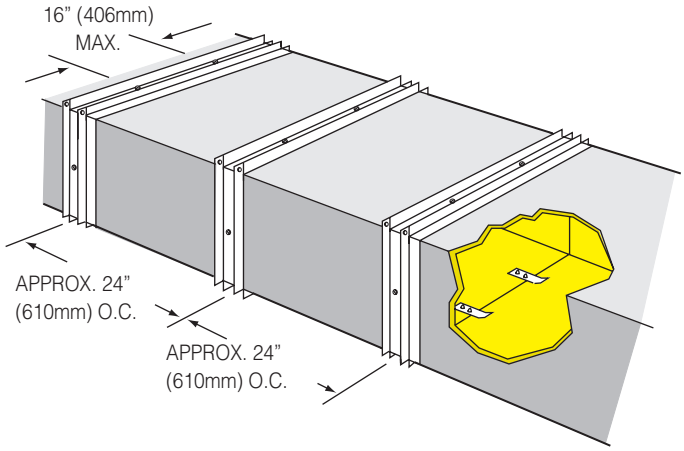

Fig. 5-12B. Channel reinforcement, 24" (610mm) (approx.) centers, 48" (1219mm) duct modules.

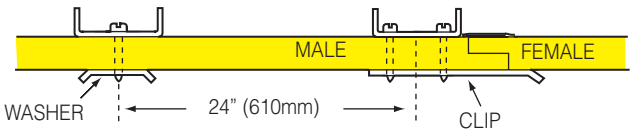

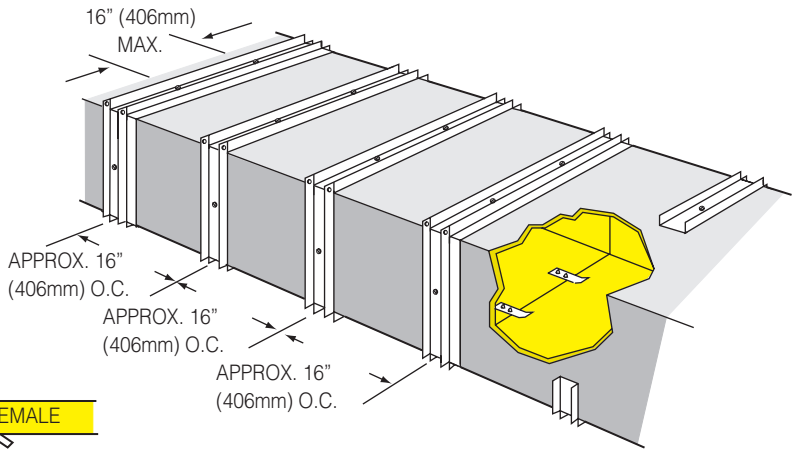

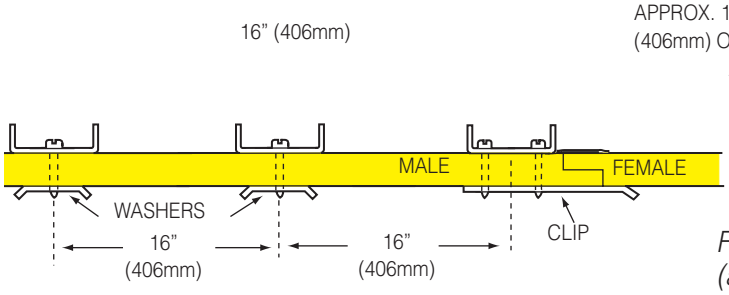

Fig. 5-12C. Channel reinforcement, 16" (406mm) (approx.) centers, 48" (1219mm) duct modules.

Partial Wrap-Around Reinforcement

Where reinforcement is required but cannot be fastened to opposite sides of a duct section or fitting, it is necessary to install formed sheet metal channels that partially wrap around a fibrous glass duct system fitting at the required location. See Table 5-4 for appropriate gauge and profile. In such cases, #10 plated sheet metal screws 1/4" (6mm) longer than duct board thickness and square or round washers, 0.028" (0.7mm) (min.) thick, are used to attach the ends of the channels to the duct board. See Fig. 5-13 at right and Table 5-8 below.

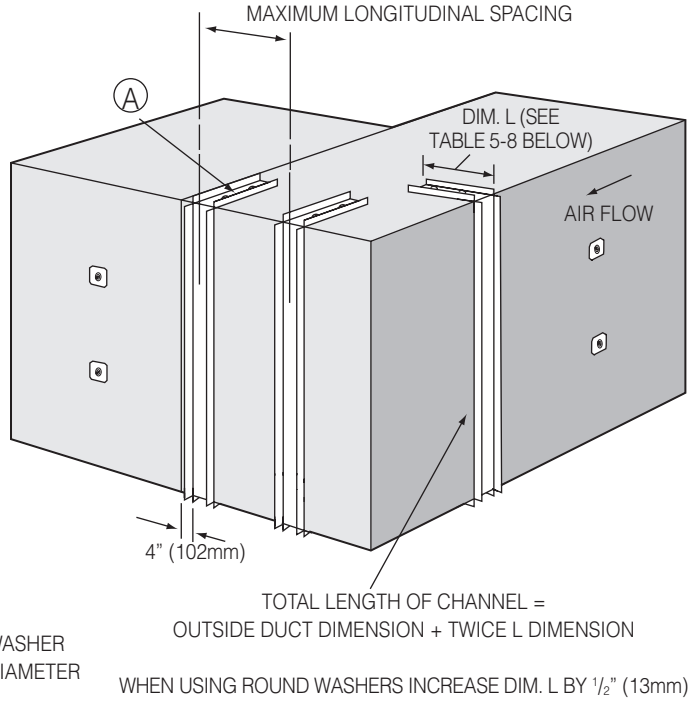

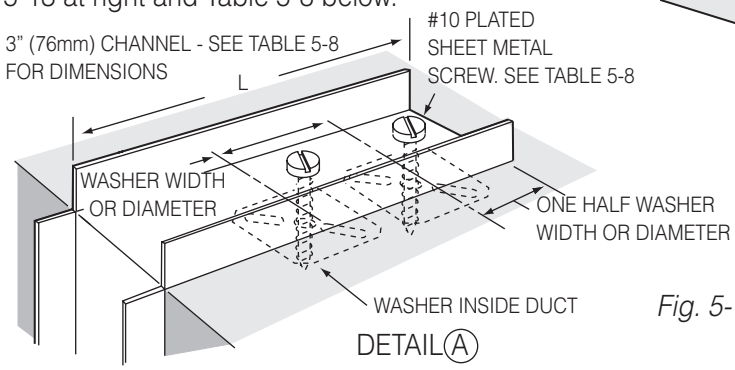

Fig. 5-13. Partial wrap-around channel reinforcement.

TABLE 5-8. PARTIAL WRAP-AROUND REINFORCEMENT SCHEDULE, POSITIVE PRESSURE

	Type 475 Duct Board				Type 800 Duct Board				Type 1400 Duct Board			
Maximum Positive Static Pressure	Maximum Inside Duct Dimension, Inches	Longitudinal spacing	Dimension L	No. of screws, each end	Maximum Inside Duct Dimension, Inches	Longitudinal spacing	Dimension L	No. of screws, each end	Maximum Inside Duct Dimension, Inches	Longitudinal spacing	Dimension L	No. of screws, each end
0" thru 1/2" w.g. (0 - 124 Pa)	0"-36"	not required			0"-36"	not required			0"-42"	not required		
	37"-96"	24"	4"	1	37"-60"	48"	4"	1	43"-96"	48"	4"	1
					61"-96"	24"	4"	1				
Over 1/2" thru 1" w.g. (125 - 249 Pa)	0"-24"	not required			0"-24"	not required			0"-36"	not required		
	25"-48"	24"	4"	1	25"-30"	48"	4"	1	37"-48"	48"	4"	1
	49"-64"	24"	7"	2	31"-48"	24"	4"	1	49"-64"	24"	7"	2
	65"-80"	24"	10"	3	49"-64"	24"	7"	2	65"-80"	24"	10"	3
	81"-96"	24"	13"	4	65"-80"	24"	10"	3	81"-96"	24"	13"	4
					81"-96"	24"	13"	4				
Over 1" thru 2" w.g. (250 - 500 Pa)	0"-15"	not required			0"-18"	not required			0"-24"	not required		
	16"-24"	24"	4"	1	19"-24"	24"	4"	1	25"-32"	24"	7"	2
	25"-32"	16"	4"	1	25"-32"	24"	7"	2	33"-48"	24"	10"	3
	33"-48"	16"	7"	2	33"-48"	24"	10"	3	49"-60"	24"	13"	4
	49"-64"	16"	10"	3	49"-60"	24"	13"	4	61"-84"	24"	16"	5
	65"-80"	16"	13"	4	61"-64"	16"	10"	3	85"-96"	24"	19"	6
	81"-96"	16"	16"	5	65"-80"	16"	13"	4				
					81"-96"	16"	16"	5				

To convert inches to millimeters in the above table multiply by 25.4. To convert feet to meters in the above table multiply by .3048.

90° Elbows, Shiplap Construction Cheek Panels -- Positive Pressure

NOTE: Some elbows may require reinforcement even though schedules for straight ducts of the same dimension may show reinforcement is not required.

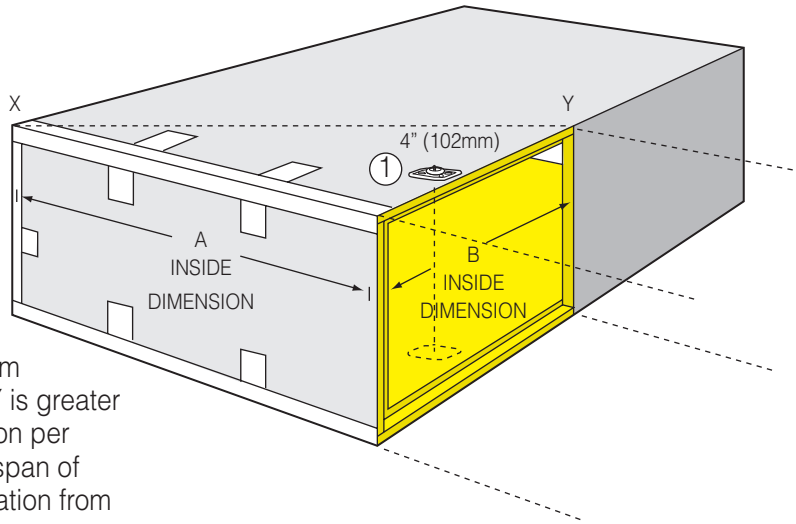

If neither A nor B are greater than the maximum unreinforced duct dimension but diagonal X-Y is greater than the maximum unreinforced duct dimension per Table 5-1, install tie rod reinforcement at mid-span of opening 1, Fig. 5-14A. See Table 5-2 for location from shiplap edge.

Fig. 5-14A. Tie rod reinforcement at diagonal X-Y, mid-span of opening. SeeTable 5-2 for location from shiplap edge. 90° elbow.

NOTE: Turning vanes omitted for clarity.

If fiber glass turning vanes are used, the tie rod and washer assemblies should be placed in the center of the diagonal.

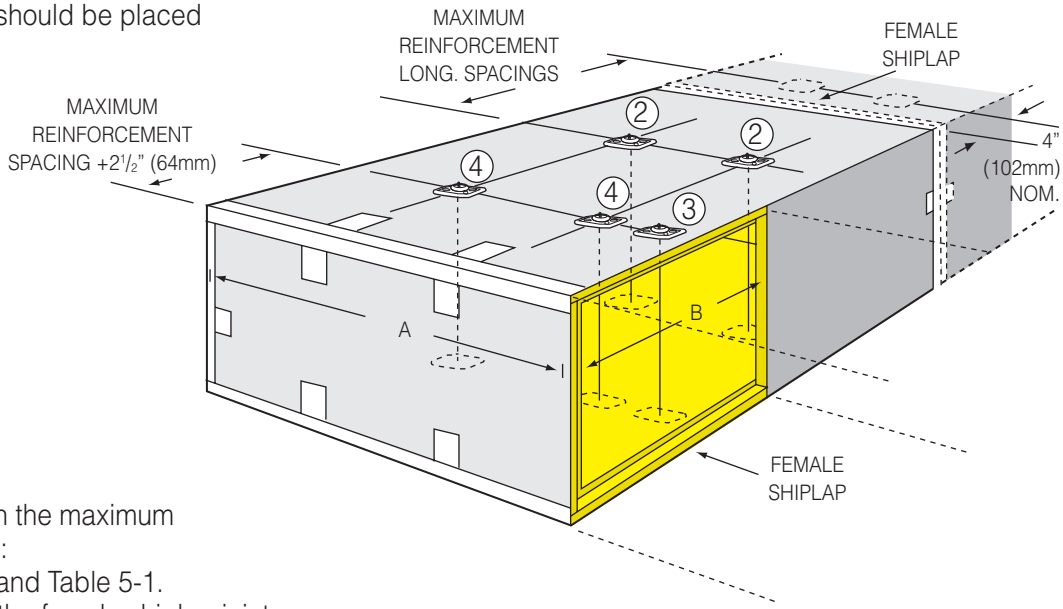

If either A or B is greater than the maximum unreinforced duct dimension:
2 Reinforce per Fig. 5-14B and Table 5-1.
3 Reinforce upstream from the female shiplap joint per Table 5-2. More than one reinforcement may be needed depending on branch width B.
4 Reinforce per Fig. 5-14B where lines of reinforcement intersect.

Fig. 5-14B. Tie rod reinforcement, cheek panels, large 90° elbows.

NOTE: Turning vanes do not replace reinforcement. For reinforcement of mitered elbows, refer to page 5-20 using reinforcement standards for offsets.

90° Elbows, Shiplap Construction
Heel and Throat Panels -- Positive Pressure

NOTE: Some elbows may require reinforcement even though schedules for straight ducts of the same dimension may show reinforcement is not required.

If duct dimension according to Table 5-8 does not require reinforcement but is 24" (610mm) or greater, install sheet metal angle per ①, Fig. 5-15A and detail Ⓐ below. Angle may also be installed on inside of throat.

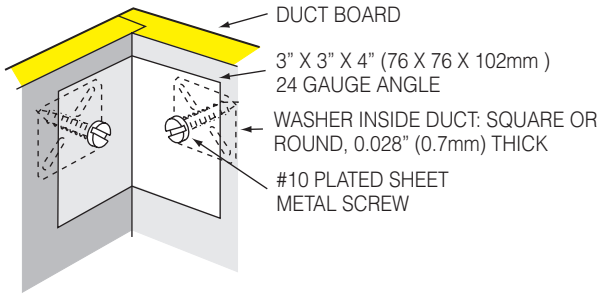

DETAIL Ⓐ. THROAT REINFORCEMENT

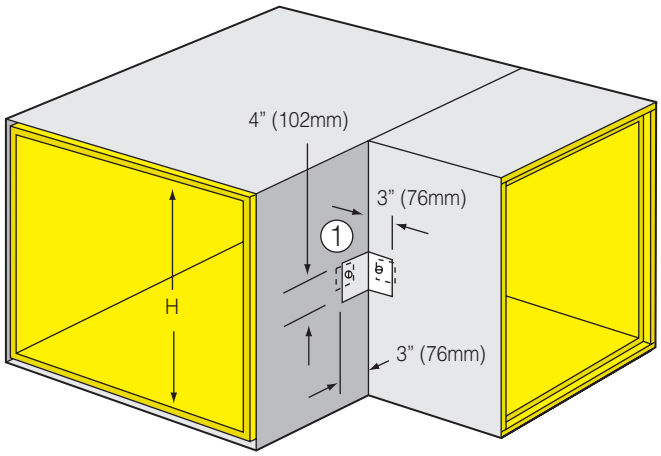

Fig. 5-15A. Sheet metal angle reinforcement at throat, 90° elbow.

NOTE: Attachment of angles is best done after closure is completed. This requires sections to be short enough to allow the installer to reach inside to install the washers.

When duct dimension normally requires reinforcing, install 24 gauge sheet metal angle per ②, Fig. 5 - 15B and detail Ⓑ below. Install tie rods through angle on upstream side, 16" (406mm) on centers, in accordance with Table 5-1, with angle length L from table below.

No. tie rods	1	2	3	4	5
Angle length L, in. (mm)	4 (102)	20 (508)	36 (914)	52 (1321)	68 (1727)

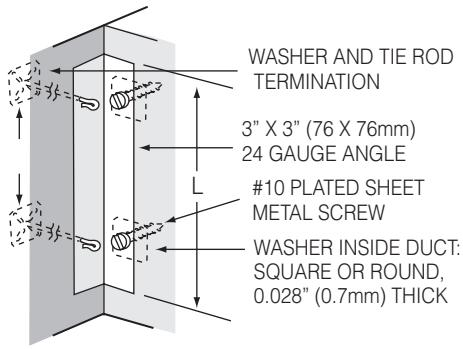

DETAIL Ⓑ. THROAT REINFORCEMENT

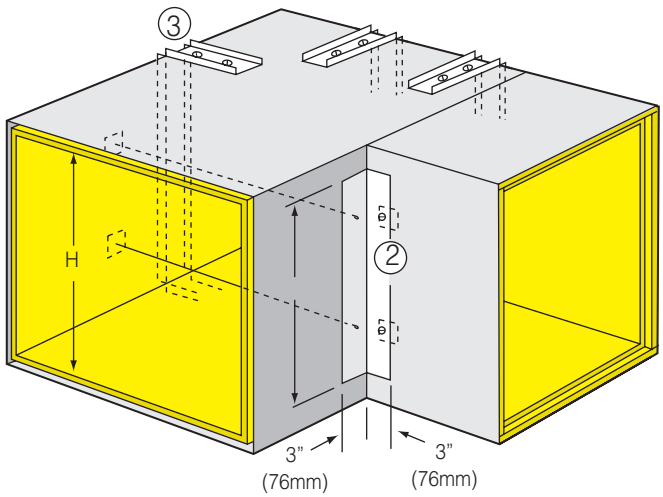

Fig. 5-15B. Sheet metal angle reinforcement at throat, large 90° elbow.

Install 3" (76mm) channel reinforcement on heel panels per ③, Fig. 5-15B, also per Table 5-8 and Fig. 5-13.

For reinforcement of mitered elbows refer to page 5-13 using reinforcement standards for offsets.

Branch Connections
Connection Reinforcement -- Positive Pressure
(See Page 5-17 for Trunk Duct Reinforcement)

NOTE: Some branches may require reinforcement even though schedules for straight ducts of the same dimensions may show reinforcement is not required.

Branch height H should be equal to the height of the trunk section; this avoids the need to reinforce the top of the branch. A transition can then be used to reduce the branch to the desired size.

Angled branches and positive take-offs may also be reinforced generally following these standards.

If H is not greater than 16" (406mm) and W is greater than half the Maximum Unreinforced Duct Dimension (MUDD), reinforce top of branch per ①, Fig. 5-16A and Detail Ⓐ, page 5-15.

NOTE: Attachment of angles to trunk and branch ducts is done after closure is completed. This requires the use of a short branch to allow the installer to reach inside to install the washers.

If H is greater than 16" (406mm) and W is less than the maximum unreinforced duct dimension (MUDD), reinforce both sides of branch per ②, Fig. 5-16B and Detail Ⓑ, page 5-15.

If H is greater than 16" (406mm) and W is greater than the maximum unreinforced duct dimension (MUDD), reinforce per ③, Fig. 5-16C, Detail Ⓑ, page 5-15, and Table 5-1. For angle length L, see table below.

No. tie rods	1	2	3	4	5
Angle length L, in. (mm)	4 (102)	20 (508)	36 (914)	52 (1321)	68 (1727)

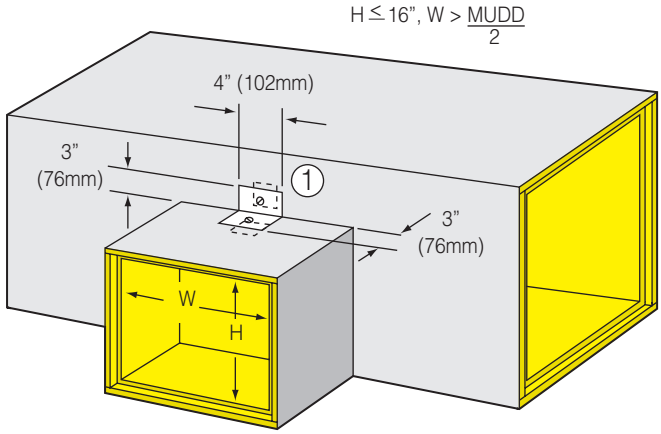

Fig. 5-16A. Sheet metal angle reinforcement, top of branch.

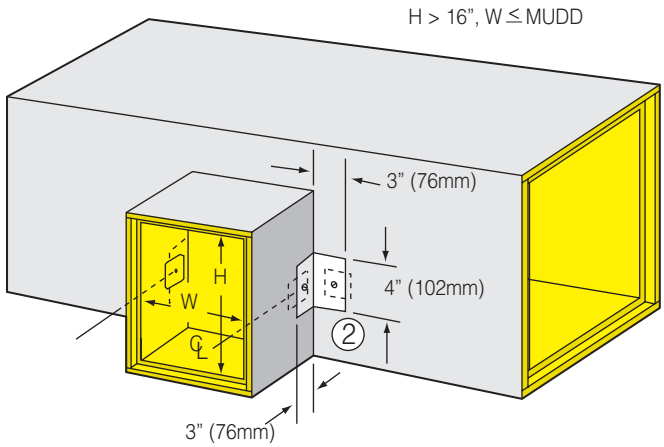

Fig. 5-16B. Sheet metal angle reinforcement, sides of branch.

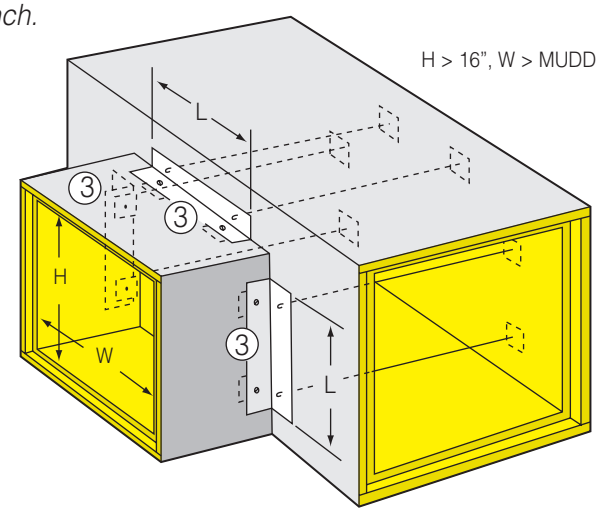

Fig. 5-16C. Sheet metal angle reinforcement, top and sides of branch.

Branch Connections
Trunk Duct Reinforcement -- Positive Pressure
(See Page 5-16 for Branch Reinforcement)

NOTE: Some branches may require reinforcement even though schedules for straight ducts of the same dimensions may show reinforcement is not required.

If W is greater than one half the maximum unreinforced duct dimension but not greater than the maximum unreinforced duct dimension, reinforce per ①, Fig. 5-17A, 4" (102mm) off female shiplap.

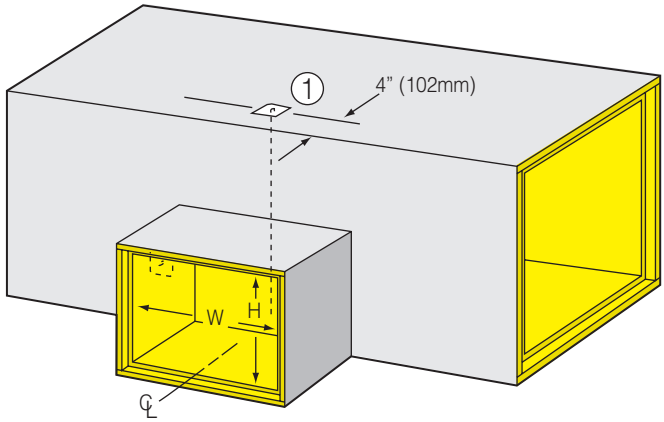

Fig. 5-17A. Trunk duct reinforcement 4" (102mm) off female shiplap.

If branch is located so it interferes with normal tie rod locations per Table 5-1, install tie rods 4" (102mm) from both sides of branch opening per ②, Fig. 5-17B.

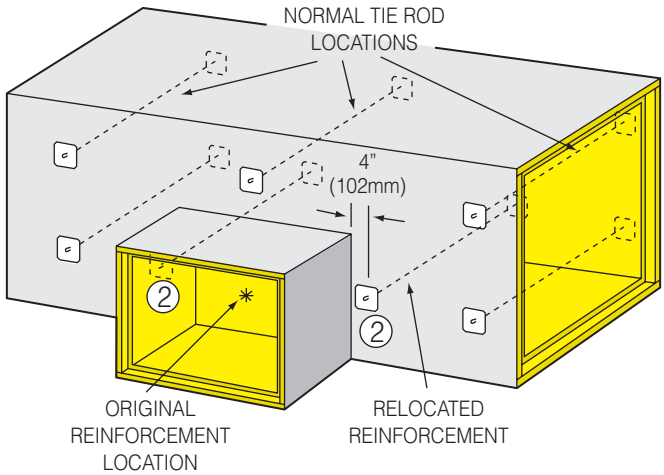

Fig. 5-17B. Trunk duct reinforcement with relocated tie rods.

If W is greater than the maximum longitudinal reinforcement spacing of the trunk duct, and/or H is greater than 16" (406mm), reinforce per ③ tie rods and using wrap around channel, Fig. 5-17C and Table 5-8.

NOTE: Attachment of channels to trunk ducts is done after closure is completed. This requires the use of a short branch to allow the installer to reach inside to install the square washers. Channels may also be wrapped around the rear corners of the trunk duct to make attachment easier.

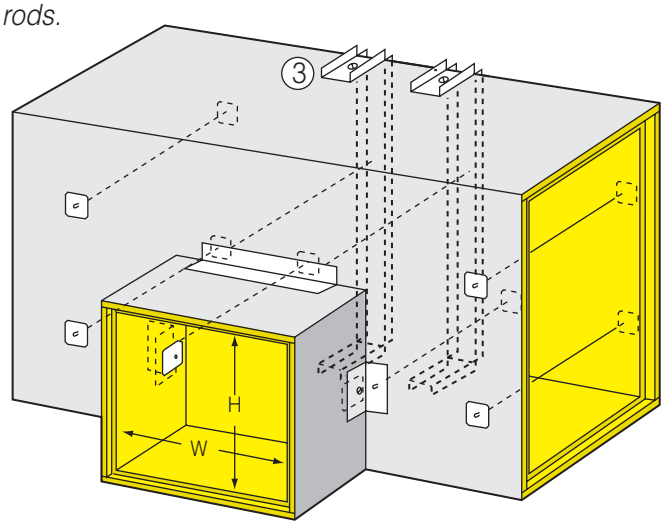

Fig. 5-17C. Trunk duct reinforcement with 3" (76mm) channels.

TEES -- Cheek Panels -- Positive Pressure (See page 5-19 for Heel and Throat Panel Reinforcement)

NOTE: Some tees may require reinforcement even though schedules for straight ducts of the same dimension may show reinforcement is not required.

If A is less than the maximum unreinforced duct dimension but diagonals X-Y or Y-Z exceed the maximum allowable unreinforced duct dimension, install tie rods per ① Fig. 5-18A, from female shiplap. (See Table 5-2)

NOTE: Turning vanes omitted for clarity.

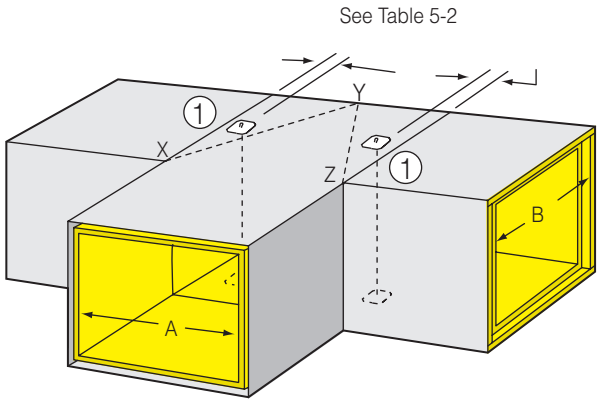

Fig. 5-18A. Tee reinforcement at female shiplap joints.

If A is greater than the maximum unreinforced duct dimension and B is greater than half the maximum unreinforced duct dimension, install tie rods in trunk section per Table 5-2 from female shiplap joints (see ② Fig. 5-18B) and also along branch and trunk center lines spaced per ③ Fig. 5-18B.

Where a splitter damper interferes with tie rod reinforcement, wraparound channels must be used in their place.

NOTE: Turning vanes do not replace reinforcement.

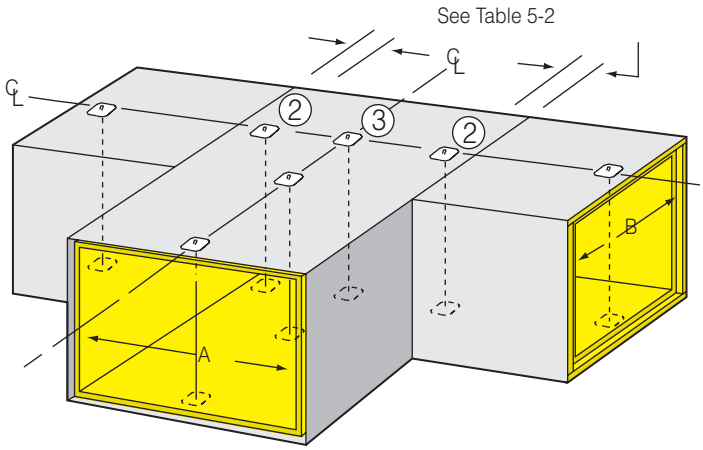

Fig. 5-18B. Tee reinforcement, normal tie rod locations.

TEES -- Heel and Throat Panels - Positive Pressure (See Page 5-18 for Cheek Panel Reinforcement)

NOTE: Some tees may require reinforcement even though schedules for straight ducts of the same dimension may show reinforcement is not required.

If H is less than the maximum unreinforced duct dimension, but 24" or greater, (610mm), reinforce per detail ①, Fig. 5-19A and detail Ⓐ, page 5-15. Reinforcement is not required at the heel.

NOTE: Attachment of angles to trunk and branches is done after closure is completed. This requires the use of a short branch to allow the installer to reach inside to install the $2^1/_2$" (64mm) washers.

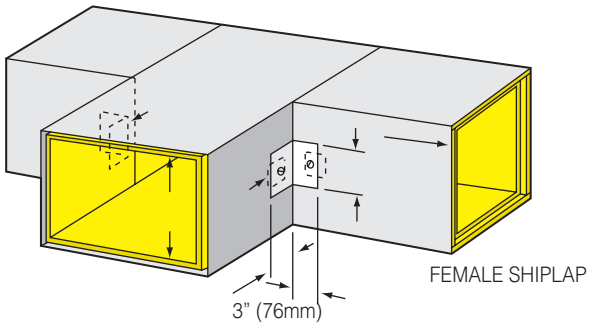

Fig. 5-19A. Tee reinforcement with 3" x 3" x 4" (76 x 76 x 102 mm) sheet metal angle at throat.

If H is greater than the maximum unreinforced duct dimension, install 3" x 3" (76mm x 76mm) 24 gauge angle, length L from table below, with tie rods spaced per Table 5-1. See ②, Fig. 5-19B.

No. tie rods	1	2	3	4	5
Angle length L, in. (mm)	4 (102)	20 (508)	36 (914)	52 (1321)	68 (1727)

Install 3" (76mm) channels on heel at female shiplaps and where required to maintain reinforcement spacing per Table 5-4. See ③, Fig. 5-19B and detail Ⓐ, page 5-13.

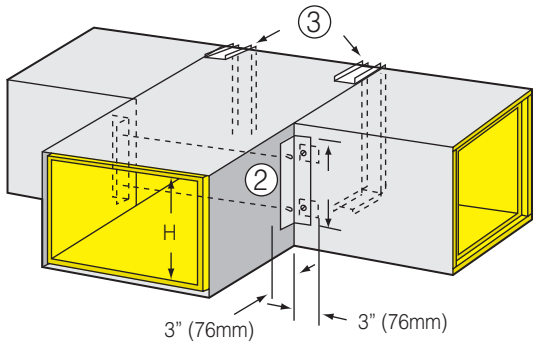

Fig. 5-19B. Tee reinforcement with throat angles and heel channels.

OFFSETS -- Cheek Panels -- Positive Pressure (See Page 5-21 for Heel and Throat Panel Reinforcement)

NOTE: Some offsets may require reinforcement even though schedules for straight ducts of the same dimensions may show reinforcement is not required.

If B is greater than the maximum unreinforced duct dimension and cheek panels have shiplap joints, reinforce per 1, Fig. 5-20A, 4" per Table 5-2. From female shiplap, spacing per Table 5-1.

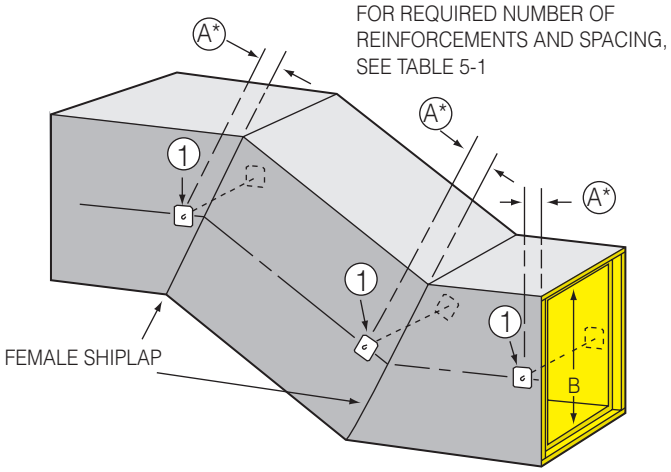

Fig. 5-20A. Offset reinforcement, cheek panels with shiplap joints.

If B is greater than the maximum unreinforced duct dimension and cheek panels have butt joints, install reinforcement at butt joints per 2, Fig. 5-20B. For details, see Fig. 5-5B, page 5-5.

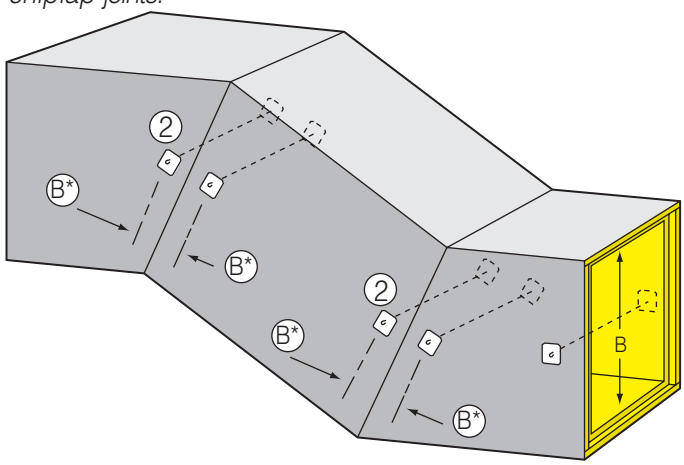

Fig. 5-20B. Offset reinforcement, cheek panels with butt joints.

If B is greater than the maximum unreinforced duct dimension and cheek panels are shiplapped, install additional tie rods along lines parallel to panel edges per 3, Fig. 5-20C and Table 5-1. Tie rods must be at locations per Table 5-2.

*A For spacing from shiplap, see Table 5-2.
*B For placement from butt edge, see Table 5-3.

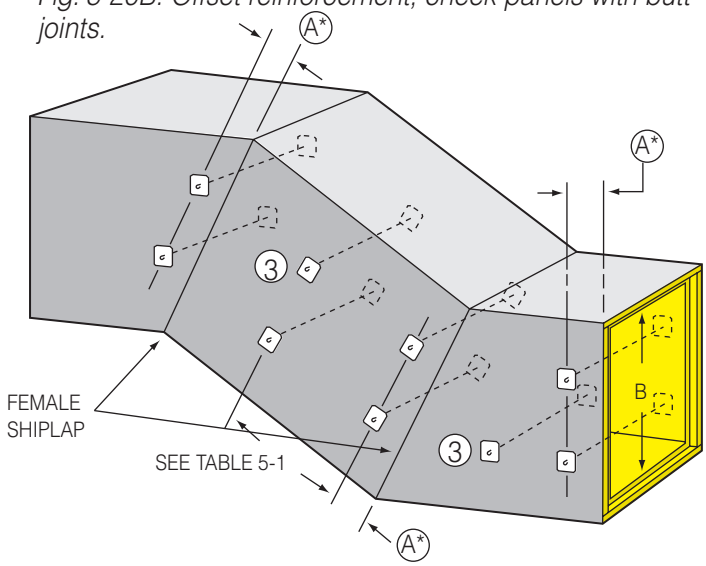

Fig. 5-20C. Offset reinforcement, tie rods along lines parallel to cheek panel edges.

OFFSETS -- Heel and Throat Panels -- Positive Pressure (See Page 5-20 for Cheek Panel Reinforcement)

NOTE: Some offsets may require reinforcement even though schedules for straight ducts of the same dimensions may show reinforcement is not required.

If A is greater than the maximum unreinforced duct dimension, reinforce per ①, Fig. 5-21A.

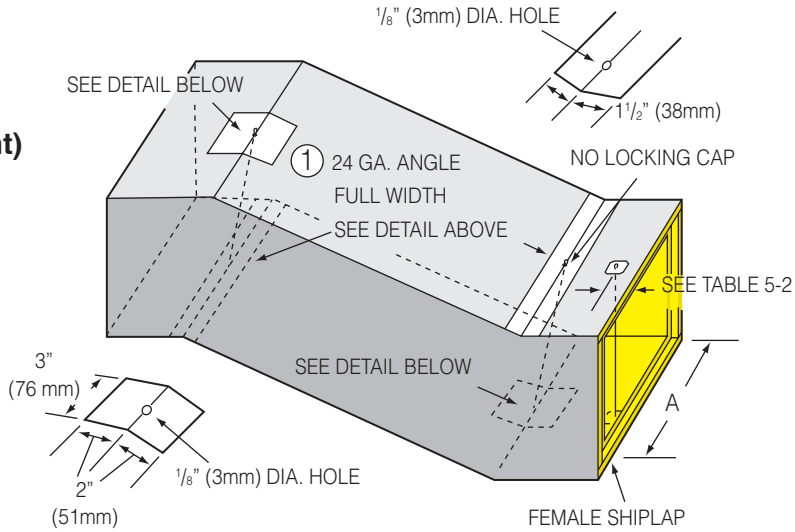

Fig. 5-21A. Offset reinforcement with sheet metal plates and tie rods.

If dimension X-Y is greater than the maximum longitudinal reinforcement spacing, install additional tie rods per ②, Fig. 5-21B.

If dimension Y-Z is greater than the maximum longitudinal reinforcement spacing, install additional tie rods per ③, Fig. 5-21B and Table 5-1 to maintain required spacing.

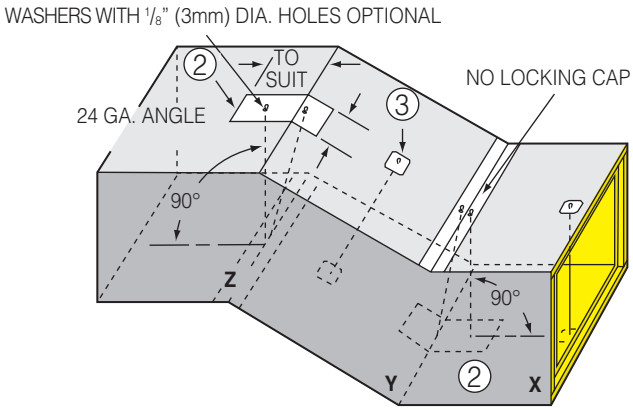

Fig. 5-21B. Offset reinforcement with tie rods through throat.

If spacing between any two tie rods exceeds the maximum longitudinal reinforcement spacing, install intermediate tie rods through throat per ④, Fig. 5-21C.

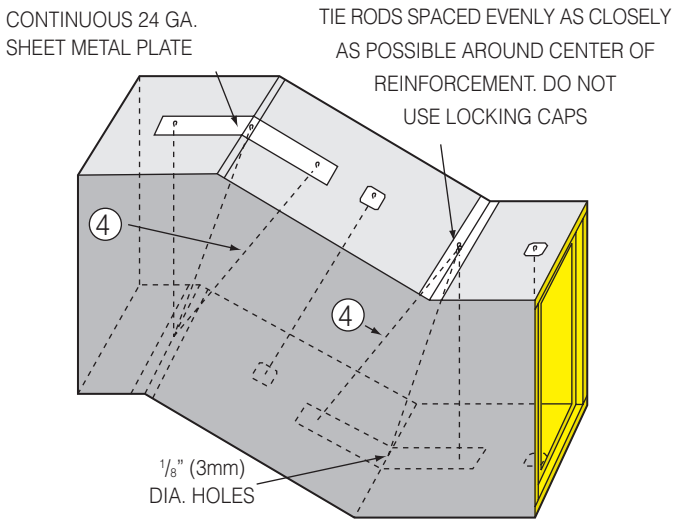

Fig. 5-21C. Offset reinforcement, intermediate tie rods and extended sheet metal plates.

TRANSITIONS -- Cheek Panels - Positive Pressure

NOTE: Some transitions may require reinforcement even though schedules for straight ducts of the same dimensions may show reinforcement is not required.

If B is greater than the maximum unreinforced duct dimension, reinforce per 1, Fig. 5-22A and Table 5-1. Determine tie rod spacing from larger duct dimension per Table 5-1. Maintain spacing and number of tie rods throughout length of transition.

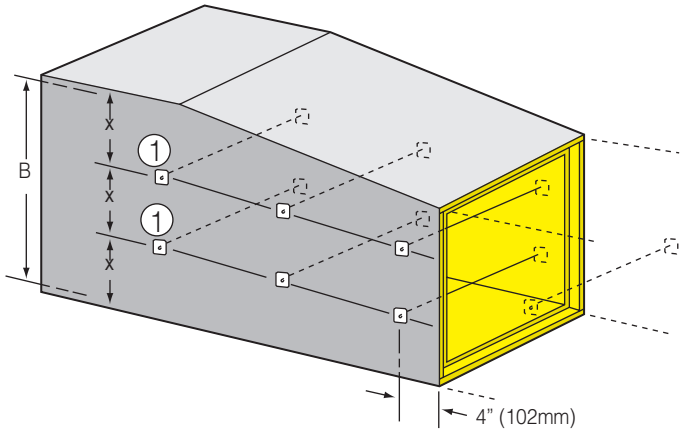

Fig. 5-22A. Transition reinforcement, cheek panels.

Transitions -- Sloped Panels -- Positive Pressure

If A is greater than the maximum unreinforced duct dimension, reinforce per 2, Fig. 5-22B, (per Table 5-2) from female shiplap. Continue with reinforcement per schedule (Table 5-1), Fig. 5-22B, and Detail 2 below.

NOTE: Where slope meets large end and facing is not cut, a $2^1/_2$" (64mm) square washer pre-bent to conform to slope angle may be used to secure tie rods. See detail 3, Fig. 5-22B.

If facing is cut, use 3" x 4" (76mm x 102mm) 24 gauge sheet metal plate, bent to conform to transition angle.

Tie rod terminations on sloped panels must be made with Fasloop terminations. They may not be made using the locking cap method.

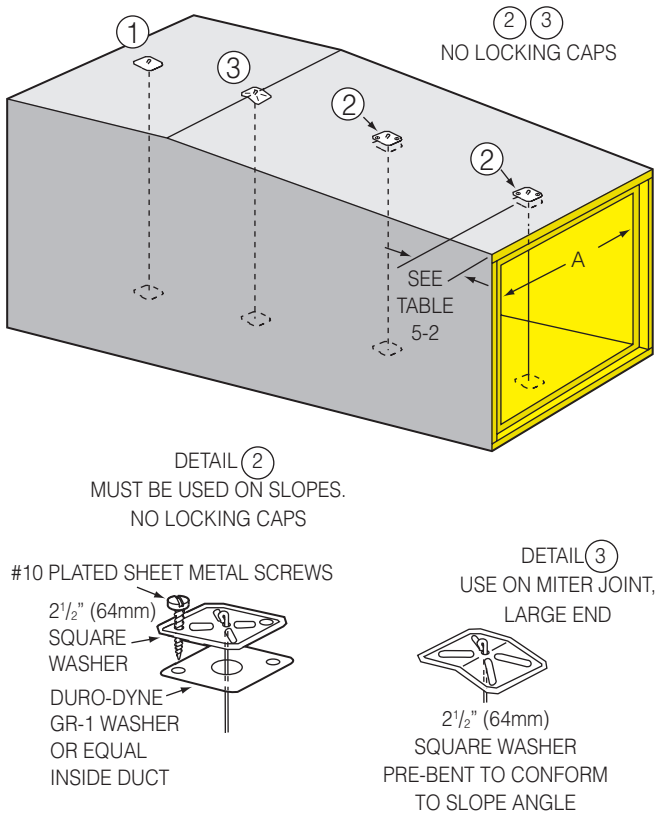

Fig. 5-22B. Transition reinforcement, sloping section.

ACCESS DOOR OPENINGS - Positive Pressure

If access door opening width is not greater than the maximum longitudinal reinforcement spacing from Table 5-1 but interferes with reinforcement locations per Table 5-1, install tie rods 4" (102mm) from both sides of door opening per ①, Fig. 5-23A. Maximum reinforcement spacing must be in accordance with Table 5-1.

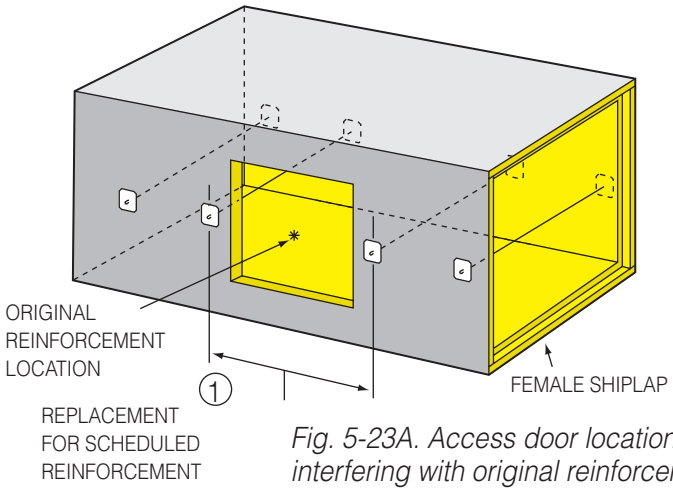

Fig. 5-23A. Access door location interfering with original reinforcement location.

If access door opening height is greater than 16" (406mm) and width is greater than maximum longitudinal reinforcement spacing as shown in Table 5-1, frame inside per ②, Fig. 5-23B. See Section III, pages 3-28 and 3-29. Install tie rods near vertical sides of door frame per spacing in Table 5-1, with $2^1/_2$" (64mm) square or 3" (76mm) round washers outside duct. Install tie rods near horizontal sides of frame per spacing in Table 5-1, measuring upstream from vertical tie rod location.

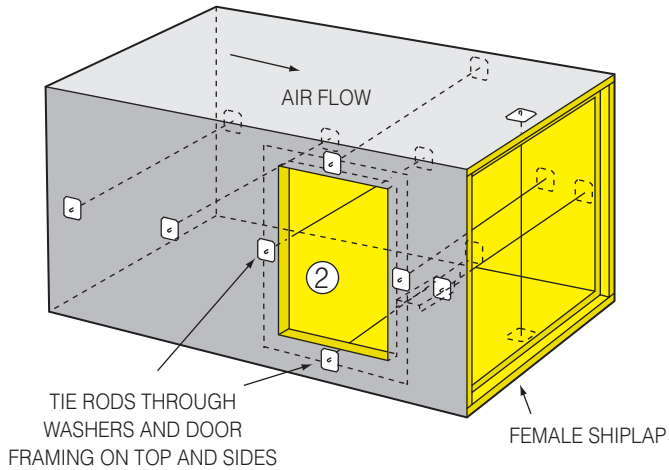

Fig. 5-23B. Reinforcement of access door framing.

Channel reinforcement in place of tie rods between access door and fire damper where tie rods would interfere with damper access or operation. Fig. 5-23C

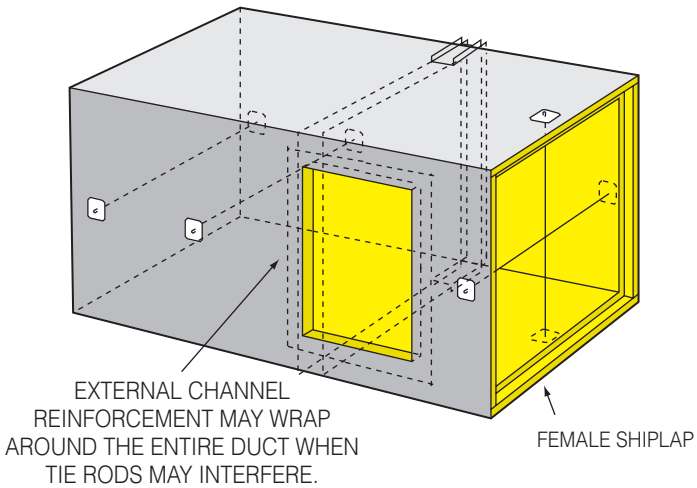

Fig. 5-23C. Channel reinforcement. See Page 5-13.

END CAPS -- Shiplap Construction

Channel Reinforcement -- Positive or Negative Pressure

NOTE: End caps require reinforcement whenever the schedule for straight ducts of the same dimension shows reinforcement is required.

Channel reinforcement must be installed on the inside of the duct to enable the end cap to withstand the static and velocity pressures to which it will be subjected.

See Table 5-4 for reinforcement channel height H and Table 5-8, for channel L. Also see Table 5-8 for longitudinal spacing and number of attaching screws for the applicable duct span and static pressure.

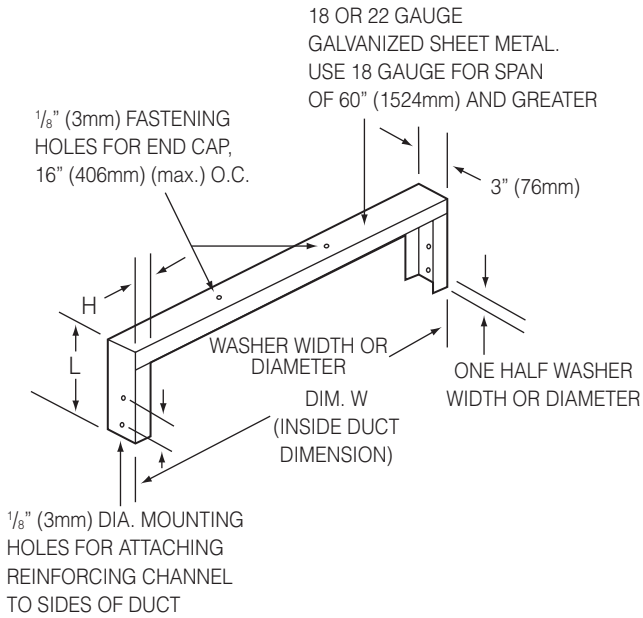

Fig. 5-24A. End cap channel reinforcement.

NOTE: End cap reinforcement may be applied either parallel to the longest inside dimension or parallel to the shortest, depending on sheet metal and fastener usage required.

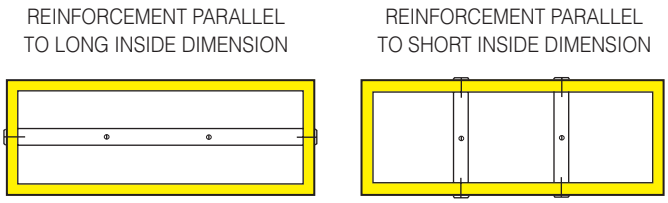

Staple and tape end cap in place. See Section IV, CLOSURE.

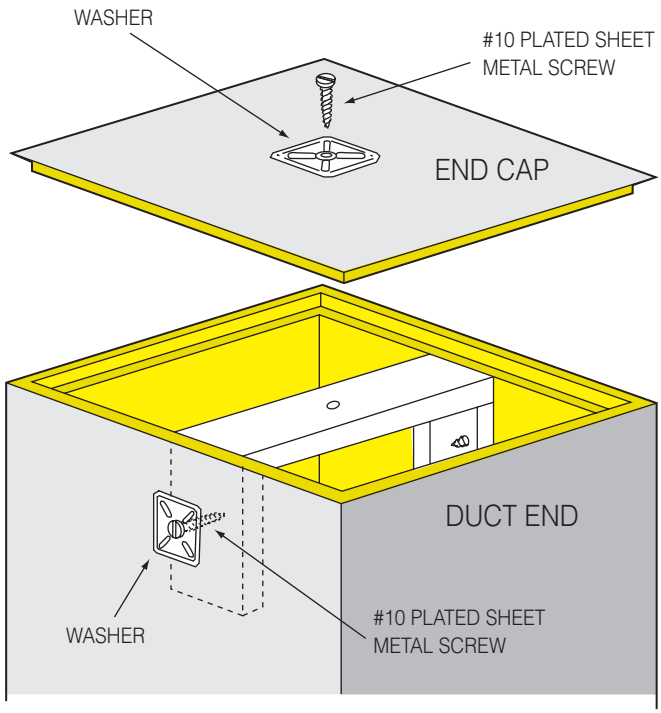

Fig. 5-24B. End cap channel reinforcement installed in duct section.

SECTION VI

HANGING AND SUPPORTS

HANGING AND SUPPORTING FIBROUS GLASS DUCT SYSTEMS

Fibrous glass ducts are light in weight and, to a large degree, self-supporting. They can be supported with a minimum of hangers if care is taken as to placement of the supports. NAIMA has conducted a study to determine the proper placement of supports for horizontal and vertical straight duct modules as well as fittings. The support techniques recommended in this Standard were demonstrated to be able to sustain static loads equivalent to three times the duct module weight. During the testing, twice the duct weight was placed in the most critical position, at the mid-point between supports.

Other hanging systems may work equally well. However, it must be demonstrated that alternate methods can provide the same load-bearing capability without undue stress to either the hanger or the fibrous glass duct system. Use of alternate methods without careful consideration of the long term stability of the technique is discouraged.

The charts and examples illustrated in this section show that the hanger treatment and spacing required depends on duct dimensions. Channels suspended trapeze-style using 12 gauge (minimum) hanger wire are the preferred method of support. Channel gauge and profile vary with duct size. In no case should the supporting channel be less than 2" (51mm) wide for rectangular fibrous glass ducts.

When channel reinforcement members occur within maximum hanger spacing as shown on page 6-3 and 6-4, sheet metal straps may be attached to the channel reinforcement as shown in Fig. 6-2. Unless local codes prohibit, 12 gauge (minimum) hanger wire may be used in place of hanger strap.

The illustrations below provide examples of proper support configurations for rectangular fibrous glass ducts.

Recommendations for hanging and support of ten sided and rigid round fibrous glass ducts may be found on page 6-8. Recommendations for hanging and support of flexible duct may be found on page 6-9.

Hanging fibrous glass duct systems in humid climates: In high humidity areas, duct systems must be suspended or elevated at least 1" (25mm) above ceiling insulation.

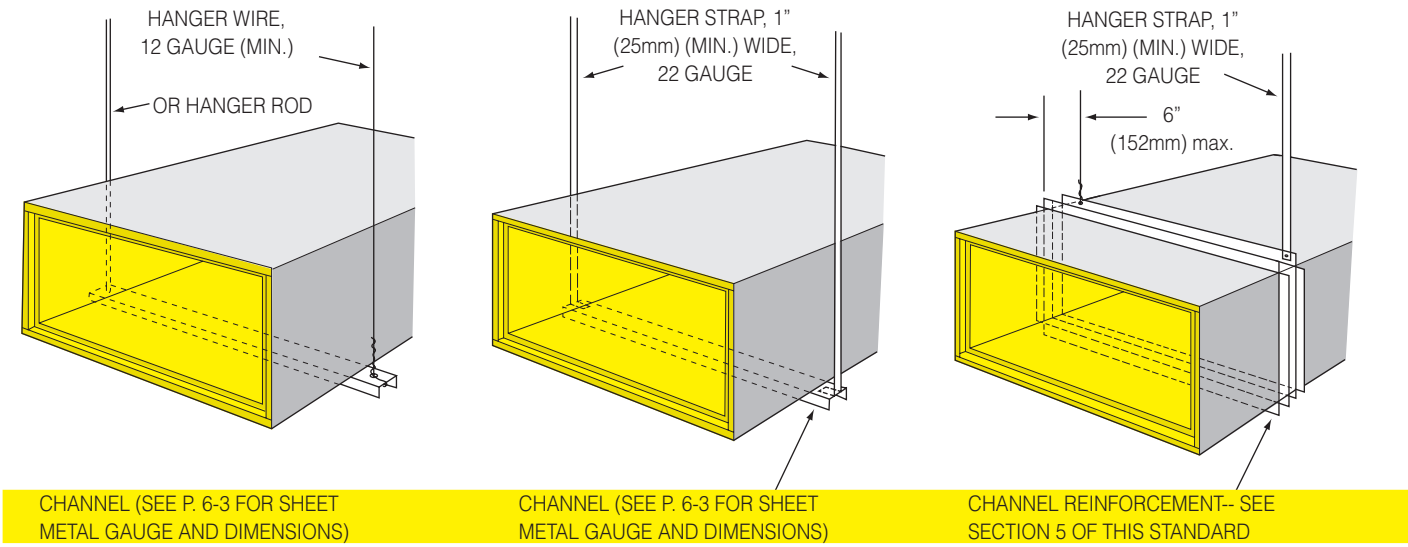

Fig. 6-2. Approved hanger configurations for rectangular fibrous glass ducts.

STANDARD 3” (76mm) HANGERS FOR RECTANGULAR DUCTS

Hanger extension is defined as the sum of the distances between the hanging wires and the duct walls (both sides).

IF TOTAL EXTENSION IS NO GREATER THAN:	MINIMUM CHANNEL GAUGE	MINIMUM CHANNEL PROFILE
6” (152mm)	24	3” x 1$^1/_2$” (76mm x 38mm)
18” (457mm)	22	3” x 2” (76mm x 51mm)
30” (762mm)	18	3” x 2” (76mm x 51mm)

Table 6-1. CHANNEL SELECTION

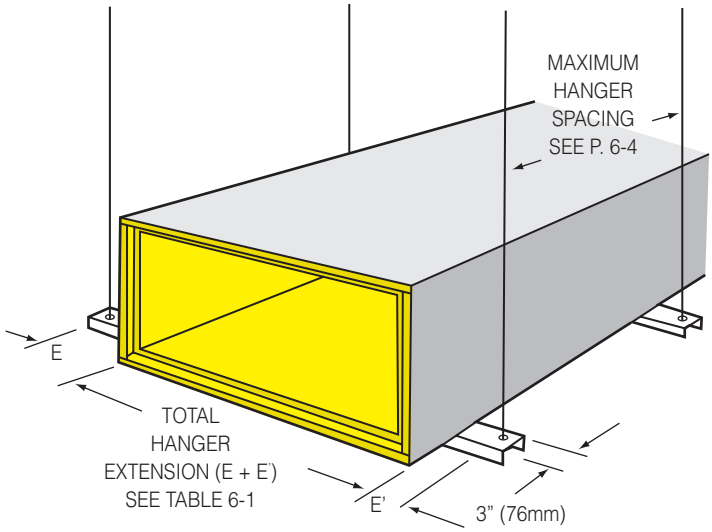

Fig. 6-3A. Hanger spacing and extension, 3” (76mm) wide channels.

Use of 2” (51mm) wide hangers

22 gauge, 2” x 1$^1/_2$” (51mm x 38mm) hangers may be substituted for 3” (76mm) hangers for ducts not over 48” (1219mm) wide and 24” (610mm) high. 2” (51mm) hangers must be spaced at 48” (1219mm) (max.) Intervals.

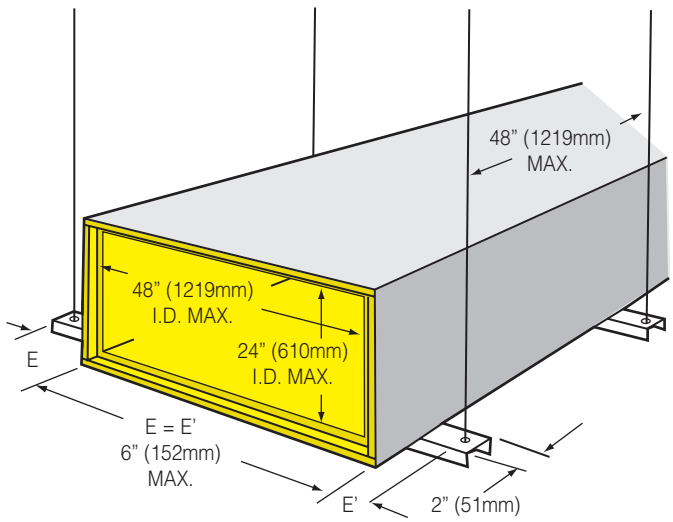

Fig. 6-3B. Use of 2” (51mm) wide hanger channels for ducts of less than 48” (1219mm) width x 24” (610mm) height.

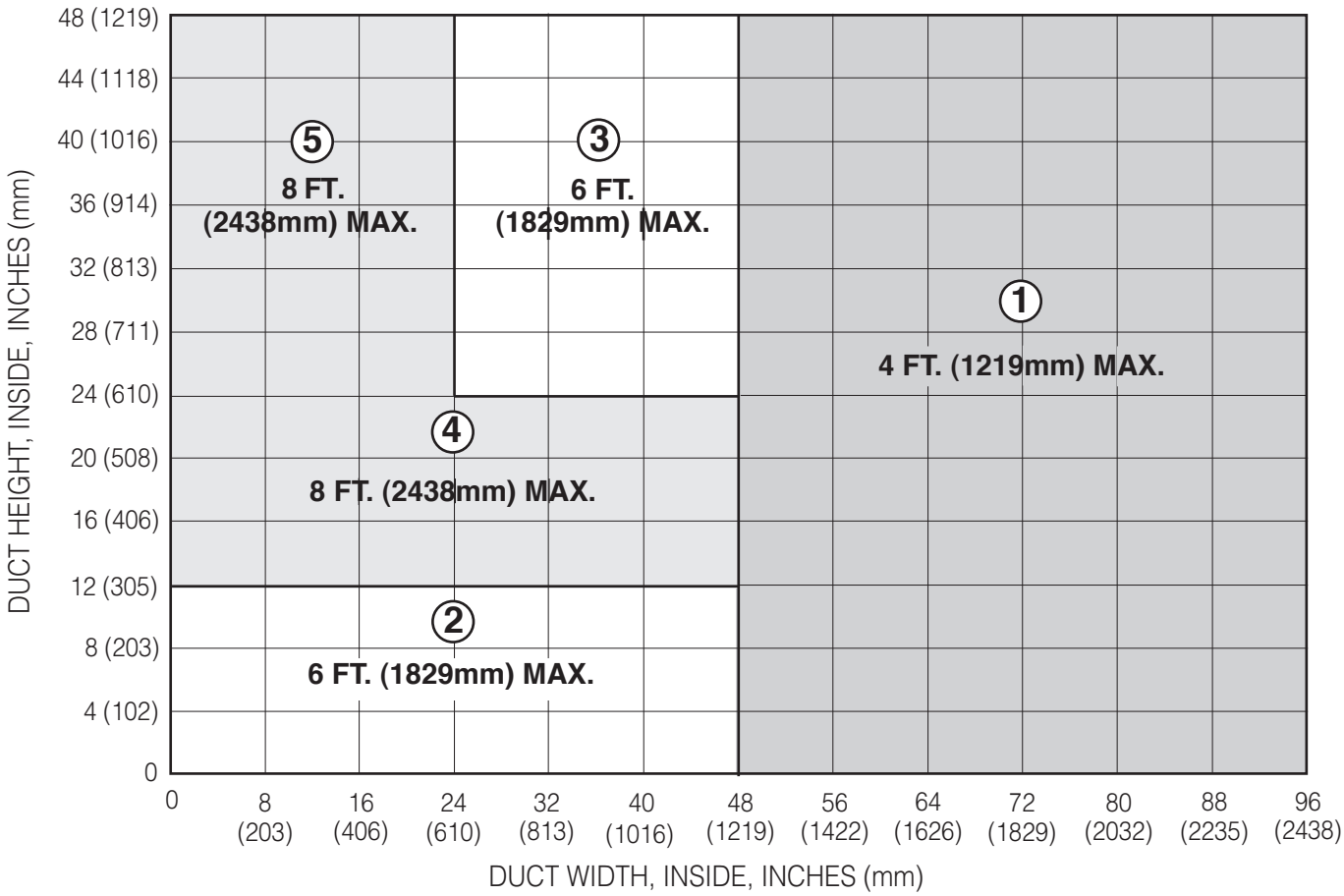

Fig. 6-4. Maximum hanger spacing chart for straight duct, 3" (76mm) wide channel.

DUCT SIZE, IN. (mm)	MAXIMUM HANGER SPACING
① Width 48" (1219mm) or greater	4 ft. (1219mm)
② Width < 48" (1219mm) Height < 12" (305mm)	6 ft. (1829mm)
③ Width ≥ 24" (610mm) & < 48" (1219mm) Height ≥ 24" (610mm)	6 ft. (1829mm)
④ Width < 48" (1219mm) Height ≥ 12" (305mm) & < 24" (610mm)	8 ft. (2438mm)
⑤ Width ≤ 24" (610mm) Height ≥ 12" (305mm)	8 ft. (2438mm)

Table 6-2. MAXIMUM HANGER SPACING BY DUCT SIZE

Hanging fibrous glass duct fittings up to 48" (1219mm) in width

Two thirds of the diagonal distance from throat to heel (approx.)

Required only when duct is greater than 18" (457mm) in width.

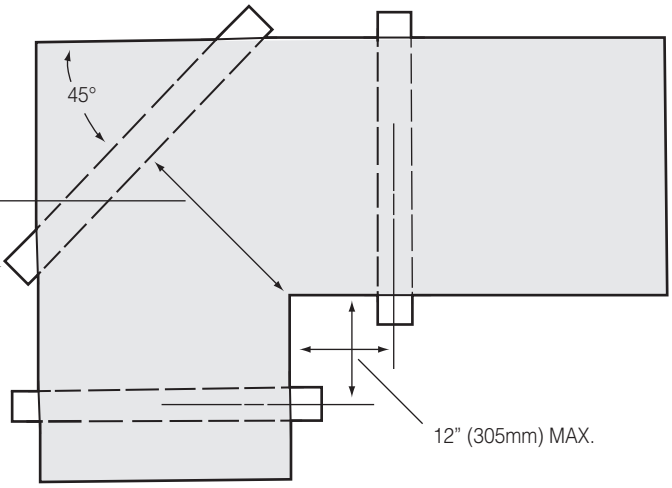

Fig. 6-5A. Elbow support.

If trunk duct hanger falls where branch duct is located, add trunk hangers on either side of branch duct. Do not exceed maximum hanger spacing (see page 6-3 or 6-4).

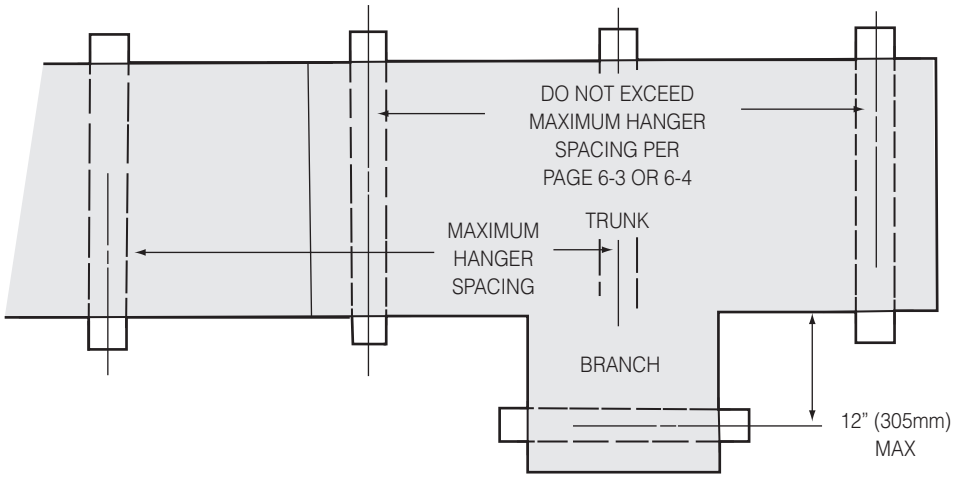

Fig. 6-5B. Branch support.

If a tee run-out hanger falls where trunk duct is located, add run-out hangers on either side of trunk. Do not exceed maximum hanger spacing (see page 6-3 or 6-4).

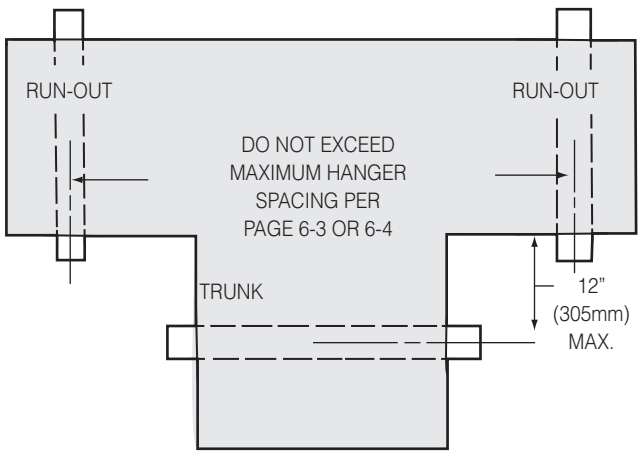

Fig. 6-5C. Tee support.

Hanging fibrous glass duct fittings up to 48” (1219mm) in width

Required only when angled portion of offset is greater than 48” (1219mm) long. Additional hangers may be required to comply with spacing. See page 6-3 or 6-4.

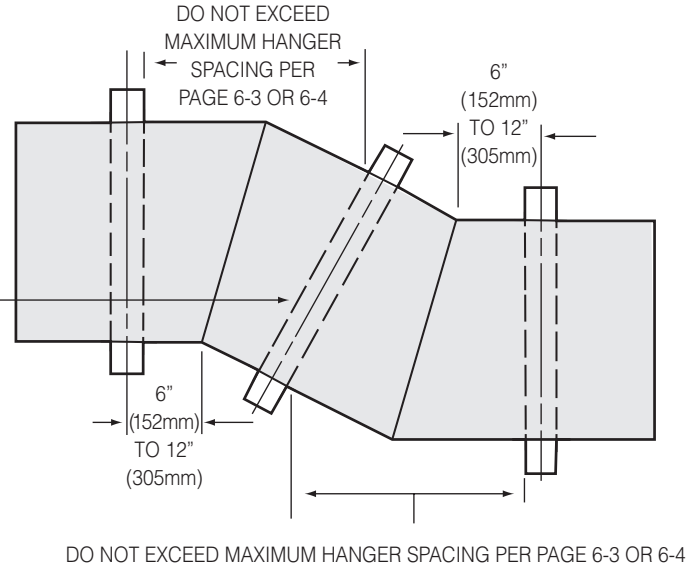

Fig. 6-6A. Offset support, flat bottom surface.

Locate hangers as for straight duct. Use closest spacing called for per page 6-3 or 6-4.

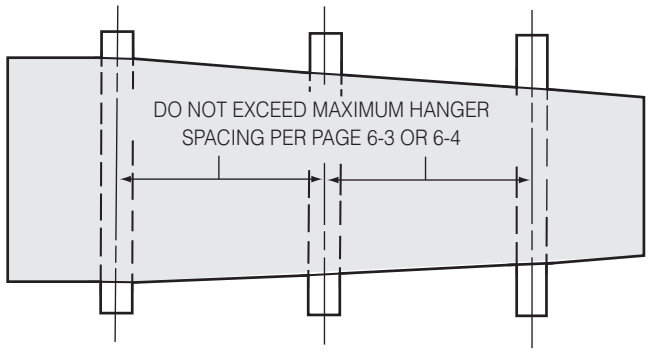

Fig. 6-6B. Transition support, flat bottom surface.

Required only when inclined portion of duct is greater than 48” (1219mm). Hanger is attached to duct per detail, Fig. 6-6D. Additional hangers may be required to comply with hanger spacing per page 6-3 or 6-4.

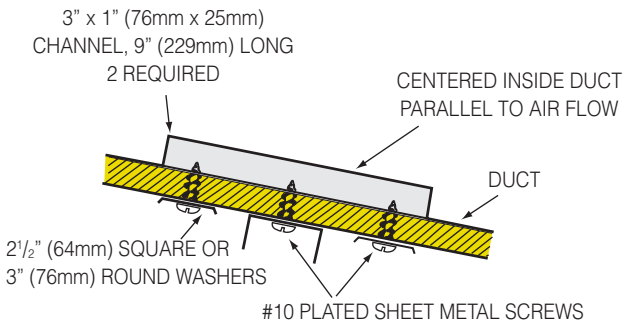

Fig. 6-6D. Detail, support at inclined bottom surface.

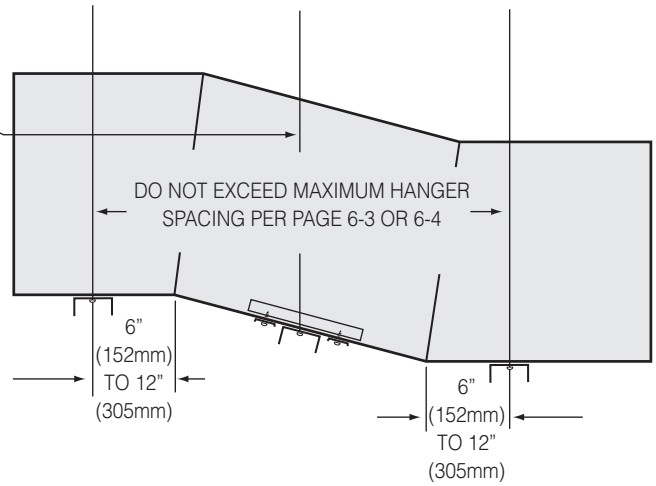

Fig. 6-6C. Supporting offsets and transitions with inclined bottom surfaces.

Vertical Riser Support

Risers in fibrous glass duct systems of 8 feet (2438mm) or greater require the use of special support as shown in Fig. 6-7. This reinforcement and support are in addition to whatever reinforcement may be required by provisions of Section V of this Standard. Vertical riser supports shall be installed at maximum spacing intervals of 12 feet (3658mm).

NOTE: Riser height is limited as stated in NFPA 90A "for vertical risers in air duct systems serving not more than two (2) stories."

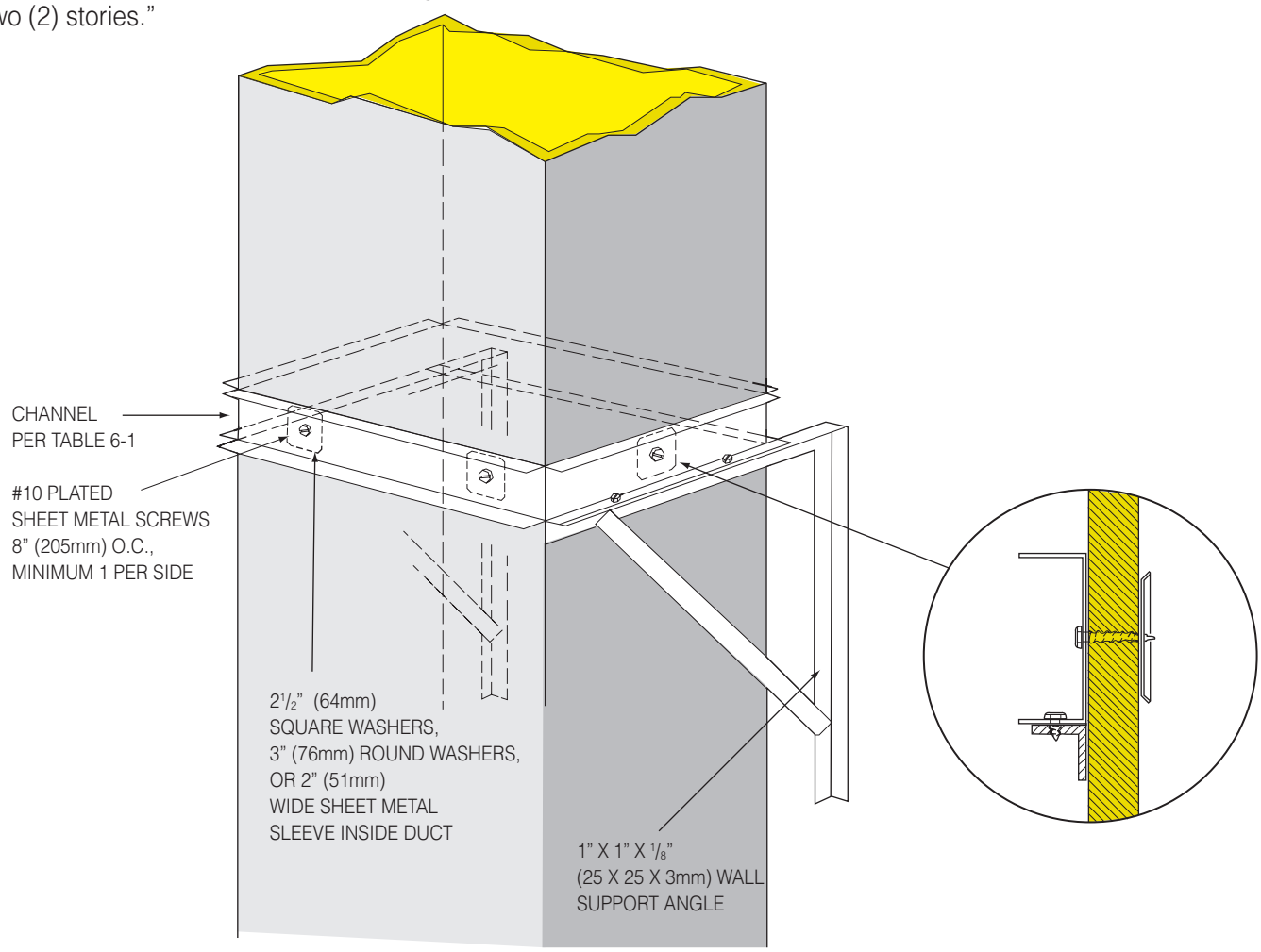

Fig. 6-7. Vertical riser support.

Hanging Ten Sided and Preformed Round Duct

Ten sided and preformed round fibrous glass duct should be hung so that the hanger will not damage the duct facing. Straps or saddles in contact with the duct shall be 1$^1/_2$" (38mm) (minimum) wide. Avoid sharp edges and burrs. Hangers should be spaced on 8 ft. (2.44m) centers (maximum). Where practical, hangers should be located at circumferential joints. Provide hanger support at all fittings.

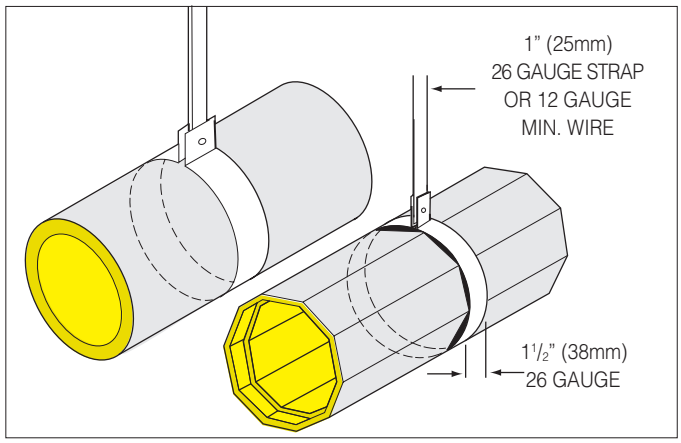

Fig. 6-8A. Single point hanging of ten sided and preformed round fibrous glass duct.

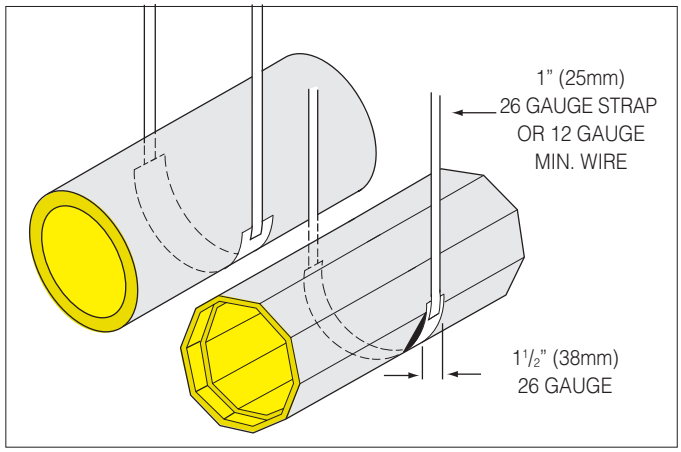

Fig. 6-8B. Hanging ten sided and preformed round fibrous glass duct with saddles and sheet metal straps.

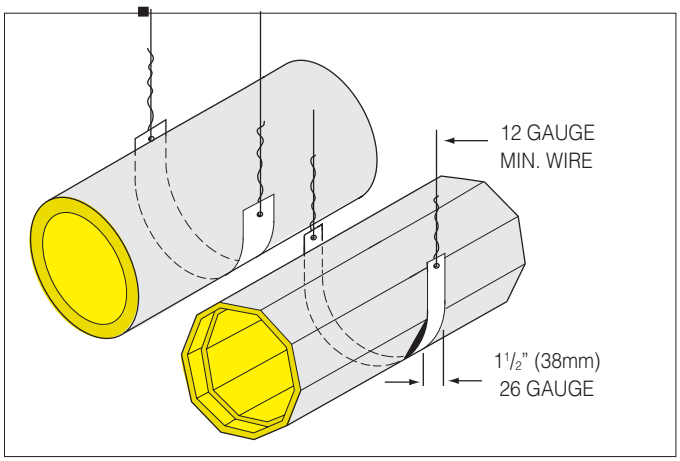

Fig. 6-8C. Hanging ten-sided and preformed round fibrous glass duct with saddles and wire.

Hanging and Supporting Flexible Duct

Flexible duct shall be supported at manufacturers' recommended intervals but at no greater distance than 5 feet (1.52m) on centers. Maximum permissible sag is $^1/_2$" per foot (42mm per meter) of spacing between supports. See Fig. 6-9A.

Connections to rectangular fibrous glass duct shall be considered a support point. Long horizontal duct runs with sharp bends shall have additional supports before and after the bend approximately one duct diameter from the centerline of the bend.

Hanger or saddle material in contact with the flexible duct shall be of sufficient width to prevent any restriction of the internal diameter of the duct when the weight of the supported section rests on the hanger or saddle material. In no case will the material contacting the flexible duct be less than $1^1/_2$" (38mm) wide. See Fig. 6-9B.

Support flexible duct between a connection to rectangular ductwork and a bend by allowing the flexible duct to extend straight for a short distance before making the bend. This will avoid possible damage to the flexible duct by the edge of the sheet metal collar. See Fig. 6-9C.

Vertically installed flexible duct shall be stabilized by support straps located 6 feet (1.83m) on centers. See Fig. 6-9D.

NOTE: Fibrous glass ducts, including flexible duct, may not be used for vertical risers in air duct systems serving more than two stories.

NOTE: Information on this page is from Flexible Duct Performance & Installation Standards, Air Diffusion Council.

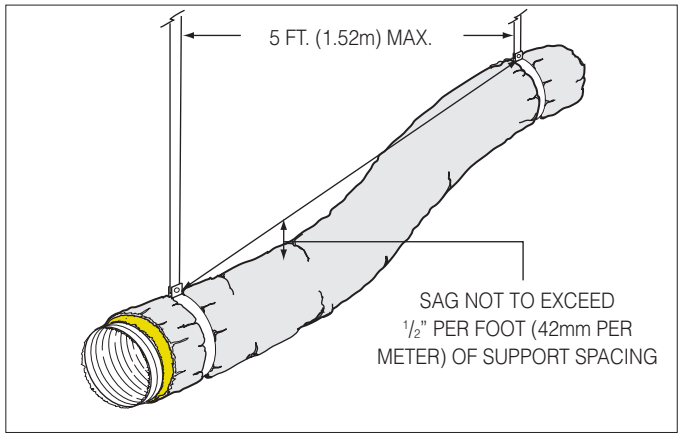

Fig. 6-9A. Support flexible duct every 5 ft (1.52m) (max.). Maximum allowable sag: $^1/_2$" per foot (42mm per meter) of support spacing.

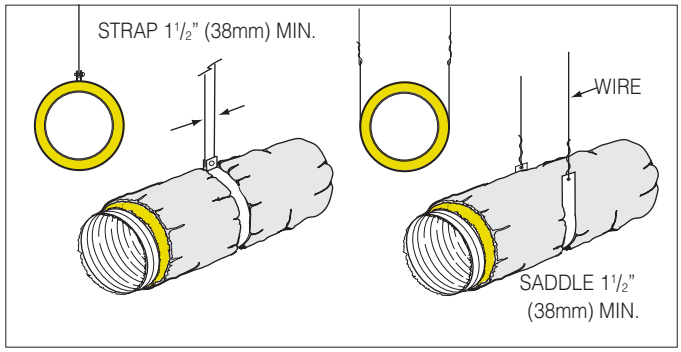

Fig. 6-9B. Hangers or saddle material must be at least $1^1/_2$" (38mm) wide to prevent restriction of the internal diameter of the flexible duct.

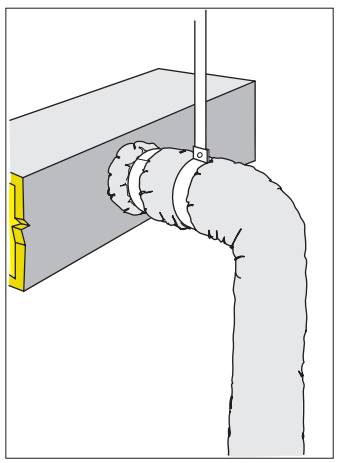

Fig. 6-9C. Support flexible duct between connection to rectangular duct and bend.

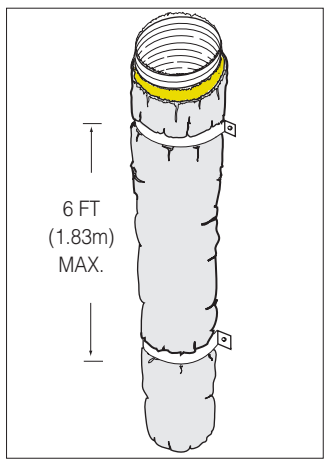

Fig. 6-9D. Vertical ducts shall be supported at 6 ft. (1.83m) (max.) intervals.

NAIMA
North American Insulation Manufacturers Association

SECTION VII

DAMAGE REPAIR

REPAIR OF SMALL FACING OR CLOSURE TEARS without loss or damage to insulation

If facing tear is limited to just a straight slit, apply closure material in accordance with Section IV, CLOSURE.

When facing damage is more than just a straight slit but is not greater than 1/2" (13mm) wide, repair as shown in Fig. 7-2A. Closure must extend beyond tear at least 1" (25mm) on all sides of tear.

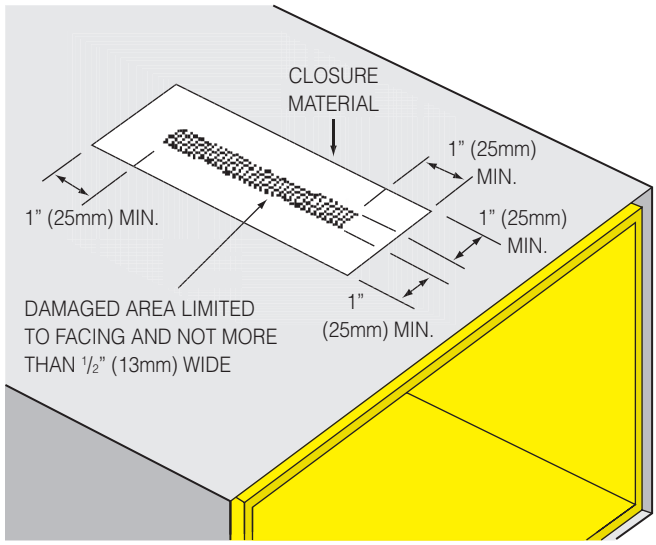

Fig. 7-2A. Repair of minor facing damage - less than 1/2" (13mm) wide.

When facing damage is wider than 1/2" (13mm) wide but less than width of closure material, smooth facing and repair as shown in Fig. 7-2B with double layer of material.

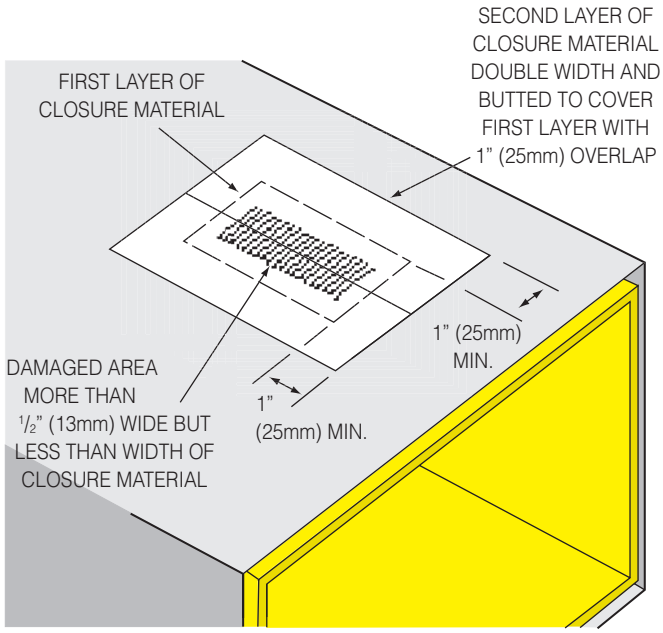

Fig. 7-2B. Repair of minor facing damage - 1/2" (13mm) wide or greater.

NOTES:

1. Use approved closure materials and methods only. Do not use heat activated tape over either pressure sensitive tape or glass fabric and mastic closure systems. See Section IV, CLOSURE.
2. Restore any reinforcement members that may have been lost due to damage or removed to facilitate repair.

REPAIR OF MAJOR DAMAGE TO ONE PANEL

When damage extends into the insulation and involves loss or severe displacement of material, repair per Fig. 7-3A. Staple and tape plug on all four sides. See Section IV, CLOSURE.

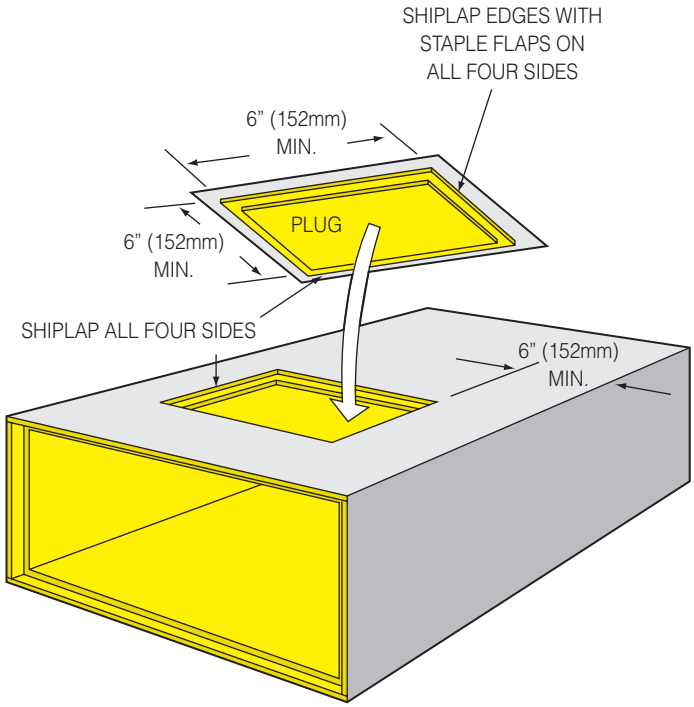

Fig. 7-3A. Repairing major damage to one panel.

If damaged area extends to within 6" (152mm) of edge, cut out and repair entire width of damaged panel per Fig. 7-3B. Staple and tape plug on all four sides. See Section IV, CLOSURE.

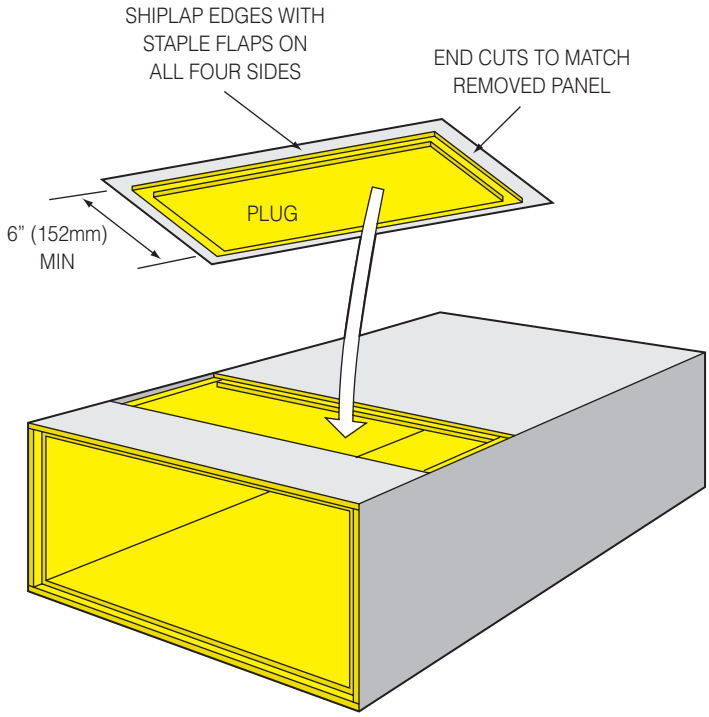

Fig. 7-3B. Repairing major damage involving entire width of panel.

NOTES:

1. Use approved closure materials and methods only. Do not use heat activated tape over either pressure sensitive tape or glass fabric and mastic closure systems. See Section IV, CLOSURE.
2. Restore any reinforcement members that may have been lost due to damage or removed to facilitate repair.

REPLACING ENTIRE SHIPLAPPED PANEL

When damage to a shiplapped panel is so extensive that the entire panel must be removed, such as impact damage that has cracked or creased the entire panel, repair per Fig. 7-4.

Fabricate a new panel per U-style method (see Section II, page 2-11) and attach to undamaged sides of duct section using approved closure materials and methods. See Section IV, CLOSURE.

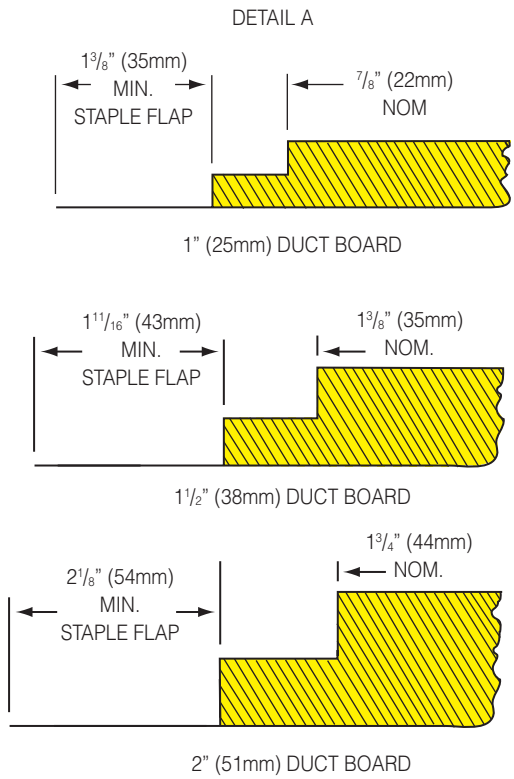

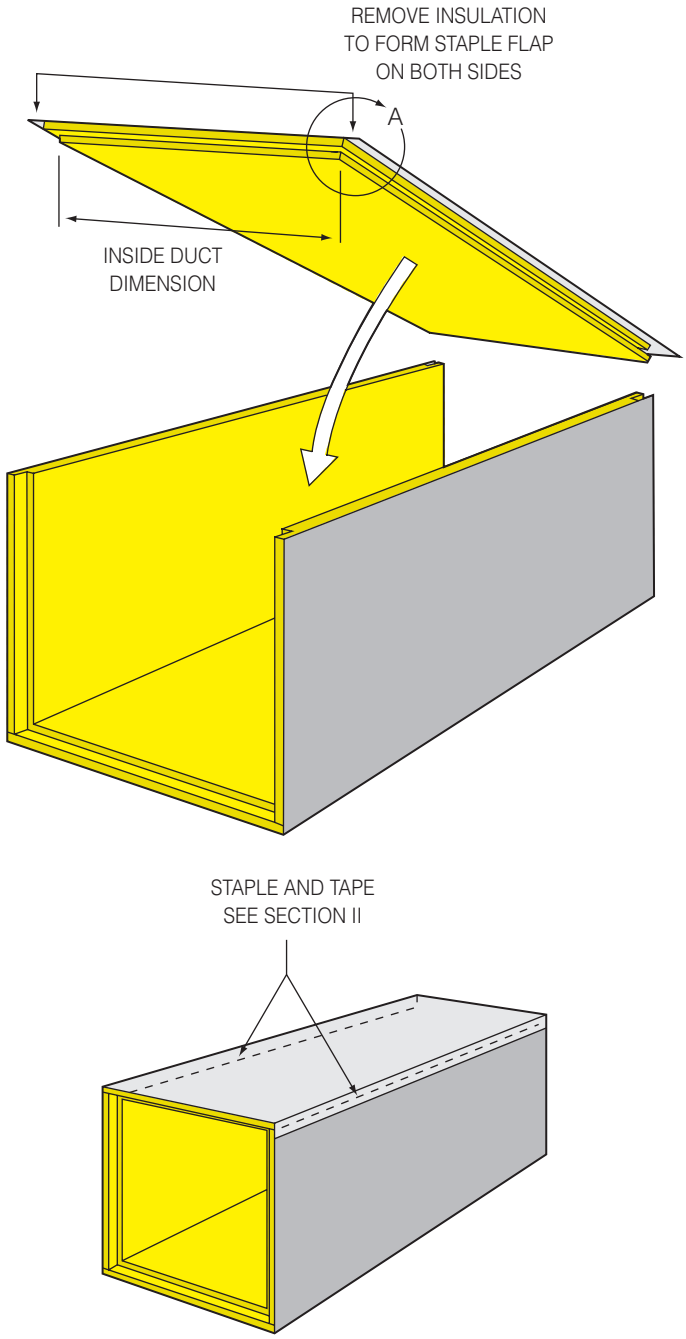

Fig. 7-4. Replacing shiplapped panel.

NOTES:

1. Use approved closure materials and methods only. Do not use heat activated tape over either pressure sensitive tape or glass fabric and mastic closure systems. See Section IV, CLOSURE.
2. Restore any reinforcement members that may have been lost due to damage or removed to facilitate repair.

REPLACING ENTIRE SQUARE EDGE PANEL

When damage to a square edge panel is so extensive that the entire panel must be removed, such as impact damage that has cracked or creased the entire panel, repair per Fig. 7-5.

Fabricate a new panel per U-style method (see Section II, Page 2-11) and attach to undamaged sides of duct section using approved closure materials and methods. See Section IV, CLOSURE.

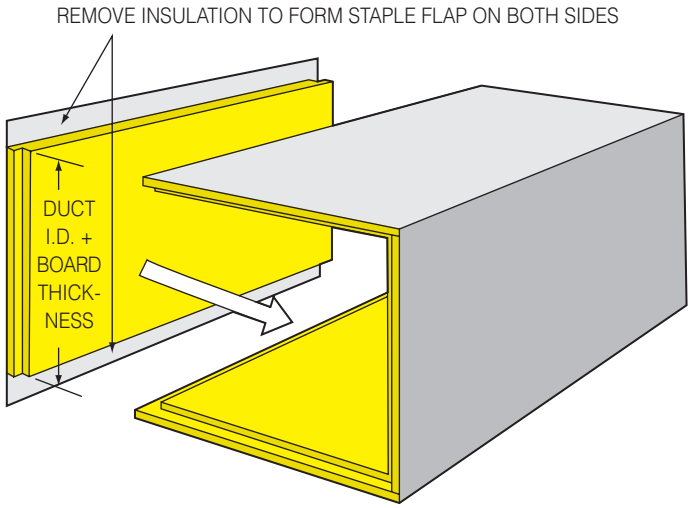

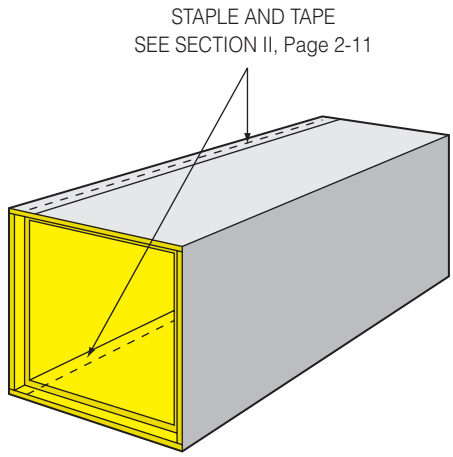

Fig. 7-5. Replacing square edge panel.

NOTES:

1. Use approved closure materials and methods only. Do not use heat activated tape over either pressure sensitive tape or glass fabric and mastic closure systems. See Section IV, CLOSURE.
2. Restore any reinforcement members that may have been lost due to damage or removed to facilitate repair.

APPENDIX

REFERENCES

The following may be used as references when working with information in this Standard. NOTE: Refer to latest editions.

ACCA - Air Conditioning Contractors of America
2800 Shirlington Road, Suite 300
Arlington, VA 22206
(703) 575-4477 • www.acca.org
- Manual D, Residential Duct Systems
- Manual J, Residential Load Calculation

ADC - Air Diffusion Council
1901 N. Roselle Road, Suite 800
Schaumburg, IL 60195
(847) 706-6750 • www.flexduct.org
- Flexible Duct Performance & Installation Standards,

ASHRAE - American Society of Heating, Refrigerating, and Air-Conditioning Engineers, Inc.
1791 Tullie Circle, N.E.
Atlanta, GA 30329
(404) 636-8400 • www.ashrae.org
- ASHRAE Handbook - Heating, Ventilating, and Air-Conditioning Applications
- ASHRAE Handbook - Heating, Ventilating, and Air-Conditioning Systems and Equipment
- ASHRAE Handbook - Fundamentals
- ASHRAE Standard 62.1, Ventilation for Acceptable Indoor Air Quality
- ASHRAE/IES 90.1, Energy Efficient Design of New Buildings (Except Low Rise Residential Buildings)
- ASHRAE Standard 90.2, Energy Efficient Design of New Low Rise Residential Buildings
- A Practical Guide to Noise and Vibration Control for HVAC Systems: Mark E. Schaffer

ASTM - American Society for Testing and Materials
100 Barr Harbor Drive
West Conshohocken, PA 19428
(610) 832-9500 • www.astm.org
- Source for copies of ASTM test methods referenced throughout this duct construction standards manual

EPA - Environmental Protection Agency
1200 Pennsylvania Ave., N.W.
Washington, DC 20460
www.epa.gov
- Building Air Quality: A Guide for Facility Owners and Building Managers

NAIMA - North American Insulation Manufacturers Association
44 Canal Center Plaza, Suite 310,
Alexandria, VA 22314
(703) 684-0084 • www.naima.org
- Pub. # AH100, Fibrous Glass HVAC Duct Systems: Proven Performance
- Pub. # AH105, Requirements for listing UL181A Closure Systems
- Pub. # AH109, A Comparison of Duct Systems Energy Savings and Acoustical Performance
- Pub. # AH110, An Essential Component of Indoor Environmental Quality ... Fiber Glass HVAC Insulations
- Pub. # AH113, The Facts About Mold Growth
- Pub. # AH114, The Facts About Airborne Fibers
- Pub. # AH116, Fibrous Glass Duct Construction Standard
- Pub. # AH121, A Guide to Insulated Air Duct Systems
- Pub. # AH122, Cleaning Fibrous Glass Insulated Duct Systems
- Pub. # AH125, Facts About the Use of Biocides and Encapsulants with Fiber Glass Air Duct Insulations

NFPA - National Fire Protection Association
1 Batterymarch Park, P.O. Box 9101
Quincy, MA 02269
(617) 770-3000 • www.nfpa.org
- NFPA 90A - Standard for the Installation of Air Conditioning and Ventilating Systems
- NFPA 90B - Standard for the Installation of Warm Air Heating and Air Conditioning Systems

SMACNA - Sheet Metal and Air Conditioning Contractors National Association
4201 Lafayette Center Dirve
Chantilly, VA 20151
(703) 803-2980 • www.smacna.org
- Fibrous Glass Duct Construction Standards
- HVAC Duct Construction Standards - Metal and Flexible
- HVAC Systems Duct Design
- Ducted Electric Heater Guide for Air Handling Systems
- Fire, Smoke & Radiation Damper Guide for HVAC Systems
- Indoor Air Quality: A Systems Approach

REFERENCES (CONTINUED)

UL - Underwriters Laboratories Inc.
333 Pfingsten Road, Northbrook, IL 60062
(847) 272-8800 • www.ul.org

- Standard for Factory-Made Air Ducts and Air Connectors, UL 181
- Standard for Closure Systems for Use with Rigid Air Ducts and Air Connectors, UL 181A
- Standard for Closure Systems for Use with Flexible Air Ducts and Air Connectors, UL 181B

ICC - International Code Council, Inc.
500 New Jersery Avenue, NW, 6th Floor
Washington, DC 20001 • (888) 422-7233
www.iccsafe.org

- International Mechanical Code
- International Residential Code for One and Two Family Dwellings
- International Building Code
- International Energy Conservation Code

GUIDE SPECIFICATION - THREE PART FORMAT SECTION 15810

Fiber Glass Duct Work - Thermal/Acoustical Insulation Light Commercial and Residential Building Systems

PART 1.00 - GENERAL

1.01 Scope

A. The work covered by this specification consists of furnishing all labor, equipment, materials and accessories, and performing all operations required, for fabrication and installation of air duct systems using fibrous glass duct board, in accordance with applicable project drawings and specifications, subject to terms and conditions of the contract:

1. All air duct systems operating at internal static pressures not exceeding ± 2" w.g. (500 Pa), internal air velocities not exceeding 2,400 fpm (12 m/sec), and internal air temperatures not less than 40°F (4°C) or exceeding 250°F (121°C).

B. The finished duct system shall meet the requirements of NFPA 90A and 90B by complying with requirements of Underwriters Laboratories Standard for Safety UL 181 for Class 1 Air Duct.

C. Dimensions shown on the plans are finished inside dimensions. Fabrication and installation shall conform to the manufacturer's recommendations and to the requirements of the latest edition of the North American Insulation Manufacturers Association's Fibrous Glass Duct Construction Standard.

D. Grooves and shiplaps shall be made using specific tools and/or machines designed for that purpose. Ends shall meet so that shiplaps fit without ridges or rough edges.

E. When flexible ducts are used as part of the system, installation shall be in accordance with the manufacturer's recommendations and to the requirements of the current edition of the Air Diffusion Council's Flexible Duct Performance and Installation Standards.

1.02 Delivery and Storage of Materials

A. Deliver all materials and/or fabricated duct sections and fittings to the job site and store in a safe dry place.

B. Use all means necessary at the job site to protect materials from dust, dirt, moisture, and physical abuse before and during installation.

PART 2.00 - PRODUCTS

2.01 Insulated Duct System

A. All rectangular supply ducts, return ducts, and related fittings of 36" (914mm) span or less for 475-EI or 800-EI duct board, or of 42" (1067mm) span or less for 1400-EI duct board, operating at plus or minus $^1/_2$" w.g. (125 Pa) shall be fabricated from one of the following:

1. Type 475-EI or Type 800-EI fibrous glass duct board 1" (25mm) thick having an R-value of 4.3 (RSI, 0.76).
2. Type 800-EI fibrous glass duct board 1½" (38mm) thick having an R-value of 6.5 (RSI, 1.14).
3. Type 800-EI and 1400-EI fibrous glass duct board 2" (51mm) thick having an R-value of 8.7 (RSI, 1.53).
4. Insulated flexible duct of like R-value may be used for run-outs to registers and grilles.

B. The duct board shall have an air barrier/vapor retarder facing of aluminum foil-kraft laminate reinforced with scrim.

C. Duct board shall be imprinted with manufacturer's name, board type and R-value in a repeat pattern. Additionally, each full duct board sheet shall have a UL Class 1 Air Duct label adhered to the facing of the board. Flexible ducts shall be identified in a similar manner.

2.02 Closure Materials

Closure materials shall be one of the following:

A. Pressure sensitive aluminum foil tapes listed under UL 181A, Part I (P) identified by name, date of manufacture, product name/number, and UL 181A/P. The minimum width of pressure sensitive tape for 1" (25mm) duct board is $2^1/_2$" (64mm). Three inch (76mm) pressure sensitive tape is recommended for $1^1/_2$" (38mm) duct board and required for 2" (51mm) duct board.

B. Heat activated tapes listed under UL 181A, Part II (H) identified by name, date of manufacture, product name/number, and UL 181A/H, may be used in all applications except for bonding to sheet metal. Tapes shall be at least 3" (76mm) wide.

C. Mastic as listed under UL 181A, Part III (M) and applied in conjunction with 3" (76mm) wide glass fabric tape. This closure system may be used as an alternative to either pressure sensitive or heat activated tapes for all closure applications.

PART 3.00 - EXECUTION

3.01 Inspection

A. Verify that the duct system may be installed in accordance with project drawings, operating performance parameters, limitations, and standards published in NAIMA Fibrous Glass Duct Construction Standards.

3.02 Fabrication, Straight Duct and Fittings

A. All straight duct sections shall be fabricated in accordance with NAIMA Fibrous Glass Duct Construction Standards, Section II, using proper machinery and tools.

B. All fittings shall be fabricated in accordance with NAIMA Fibrous Glass Duct Construction Standards, Section III, using proper machinery, tools and techniques.

C. All fibrous glass duct board distribution boxes shall be fabricated in accordance with NAIMA Fibrous Glass Duct Construction Standards, Section II and III, using proper machinery, tools, and templates.

3.03 Closure

A. Mechanical fasteners of the types shown in NAIMA Fibrous Glass Duct Construction Standards shall be used to connect the duct board to sheet metal before application of closure material.

B. Flaps on all field joints shall be stapled approximately 2" (51mm) on centers with $^1/_2$" (13mm) (min.) outward clinching galvanized steel staples near the edge of the flap. Staples shall be formed of 0.040" x 0.020" (1.02 x 0.51mm) flat wire and shall have a crown width of 0.400" (10.2mm) (min.). On fitting joints where stapling flaps cannot be included as part of the construction, tape tabs 8" (203mm) (nom.) in length shall be used. Tabs shall be centered over the joint, a minimum of one tab per duct side and/or 12" (305mm) (nom.) on centers.

C. On field joints, all taping surfaces shall be wiped clean before sealing. If the surface is contaminated with grease or oil it shall be cleaned with a solvent recommended by the tape manufacturer.

D. Pressure sensitive tape shall be firmly rubbed in place immediately after application using a squeegee type tool. When the duct surface temperature is below 50°F (10°C), a heat sealing tool shall be used on pressure sensitive tapes to assure bonding.

E. Heat activated tape shall be sealed down with an iron (do not use a heat gun) using a smearing action. Heat sealing equipment must be capable of maintaining a sufficient temperature at the duct surface to assure an adequate bond. Colored dots on tape surface shall become darkened, indicating that satisfactory bonding temperature has been reached. Staples may be omitted when closures are made by machine using heat activated tape. Allow joint to cool before stressing.

F. Mastic shall be brushed onto joint and glass fabric imbedded in it. A second coat of mastic shall be brushed over the glass fabric until the fabric is filled. Mastics shall be applied in accordance with application instructions on the container.

3.04 Reinforcement

A. All straight ducts and fittings shall be reinforced to prevent ballooning, collapsing or sagging using either the formed sheet metal system or the tie rod system in accordance with the provisions of Section V of NAIMA Fibrous Glass Duct Construction Standards. Tie rod washers shall be $2^1/_2$" (64mm) square or 3" (76mm) diameter and shall be made of plated or galvanized steel of at least 0.028" (0.7mm) thickness, with turned edges to prevent cutting into the facing of the duct board. Hole size shall be approximately 0.150" (3.8mm) to allow the tie rod to move freely through the washer.

B. To prevent sagging of top panels of supply ducts over 48" (1219mm) in width reinforced with formed sheet metal channels, #10 plated sheet metal screws shall be installed with $2^1/_2$" (64mm) square or 3" (76mm) round plated or galvanized steel washers inside the duct on the longitudinal centerline of the duct. When tie rod reinforcement is used, sag support shall consist of $^1/_2$" (13mm) rigid galvanized steel conduit and $2^1/_2$" (64mm) square or 3" (76mm) round plated or galvanized steel washers inside the duct on the longitudinal centerline 3" (76mm) from the male shiplap edge. For all negative pressure systems, refer to NAIMA Fibrous Glass Duct Construction Standards for proper spacing of reinforcement and proper attachment to the duct board.

3.05 Hanging and Support

A. The duct system shall be supported in accordance with the provisions of Section VI of NAIMA Fibrous Glass Duct Construction Standards.

B. All hangers, supports, and attachments to the structure must be capable of withstanding three times the anticipated load.

3.06 Accessories

A. Doors, coils, dampers, registers, grilles, diffusers, turning vanes, volume extractors, and other accessory items shall be installed as detailed in NAIMA Fibrous Glass Duct Construction Standards with adequate reinforcement and support to accommodate additional weight without damage to the duct board. Dampers over 2 sq.ft. (0.19 m^2) shall be supported by sheet metal sleeves with all moving parts shielded with galvanized sheet metal at abrasion points. All 90° elbows shall contain turning vanes spaced at 3" (76mm) (max.) intervals, mounted in accordance with the turning vane manufacturer's instructions. Turning vanes shall not be considered as reinforcing members. If volume extractors or splitter dampers are required on side take-off or split duct connections, they shall be fabricated using appropriate hardware. Slip-in electric heating coils shall be supported independently of the duct system and shall be installed in galvanized sheet metal sleeves extending 6" (152mm) (min.) on both sides of the coils. Connection of accessory items shall be made to the duct system using $2^1/_2$" (64mm) square or 3" (76mm) diameter galvanized or plated steel washers to spread the load to the duct board.

3.07 Inspection

A. Upon completion of installation of the duct system and before operation is to commence, visually inspect the system and verify that it has been correctly installed using the Inspection Check List in NAIMA Fibrous Glass Duct Construction Standards. Remove any scraps and loose pieces of material from inside the duct system.

B. Open all system dampers and turn on fans to blow all remaining loose material out of the duct system.

C. Check the duct system to ensure that there are no air leaks through joints, or through tears or punctures of the air barrier facing. If tears or punctures are found, repair these using procedures detailed in Section VII, NAIMA Fibrous Glass Duct Construction Standards.

3.08 Safety Precautions

A. Contractor shall conduct all job site operations in compliance with applicable provisions of the Occupational Safety and Health Act, NAIMA's Product Stewardship Program and all state and/or local safety and health codes and regulations that may apply to the work.

GUIDE SPECIFICATION - SHORT FORM

All supply and return ductwork operating within the range of positive or negative 2" w.g. (250 Pa) static pressure, 2,400 fpm (12 m/sec) internal air velocity, and 40°F (4°C) to 250°F (121°C) internal air temperature shall be constructed of fibrous glass duct board with a Class 1 UL 181 rating of one of the following types:

1. 1" (25mm) thick
   R-value at 75°F mean, hr ft^2 °F/Btu, 4.3
   (RSI-value at 24°C mean, m^2 °C/W, 0.76)
2. $1^1/_2$" (38mm) thick
   R-value at 75°F mean, hr ft^2 °F/Btu, 6.5
   (RSI-value at 24°C mean, m^2 °C/W, 1.14)
3. 2" (51mm) thick
   R-value at 75°F mean, hr ft^2 F/Btu, 8.7
   (RSI value at 24°C mean, m^2 °C/W, 1.53)

Fabrication and installation of fibrous glass duct shall conform to the requirements of the North American Insulation Manufacturers Association's Fibrous Glass Duct Construction Standards, current edition, and/or to the duct board manufacturer's recommendations.

The closure system shall be one of those listed by the duct board manufacturer or meeting the requirements of UL 181A. Application shall comply with procedures specified in the manufacturer's instruction sheets. The minimum width pressure sensitive tape for 1" (25mm) duct board is $2^1/_2$"(64mm). Three inch (76mm) tape is recommended for $1^1/_2$" (38mm) duct board and required for 2" (51mm) duct board.

Reinforcement, support, and accessory installation details shall comply with the latest edition of NAIMA Fibrous Glass Duct Construction Standards or as specified by the duct board manufacturer.

Details governing hanging of ducts and the installation of other accessory items shall be in compliance with the latest edition of NAIMA Fibrous Glass Duct Construction Standards or as specified by the duct borad manufacturer.

Map of DOE's Climate Zones

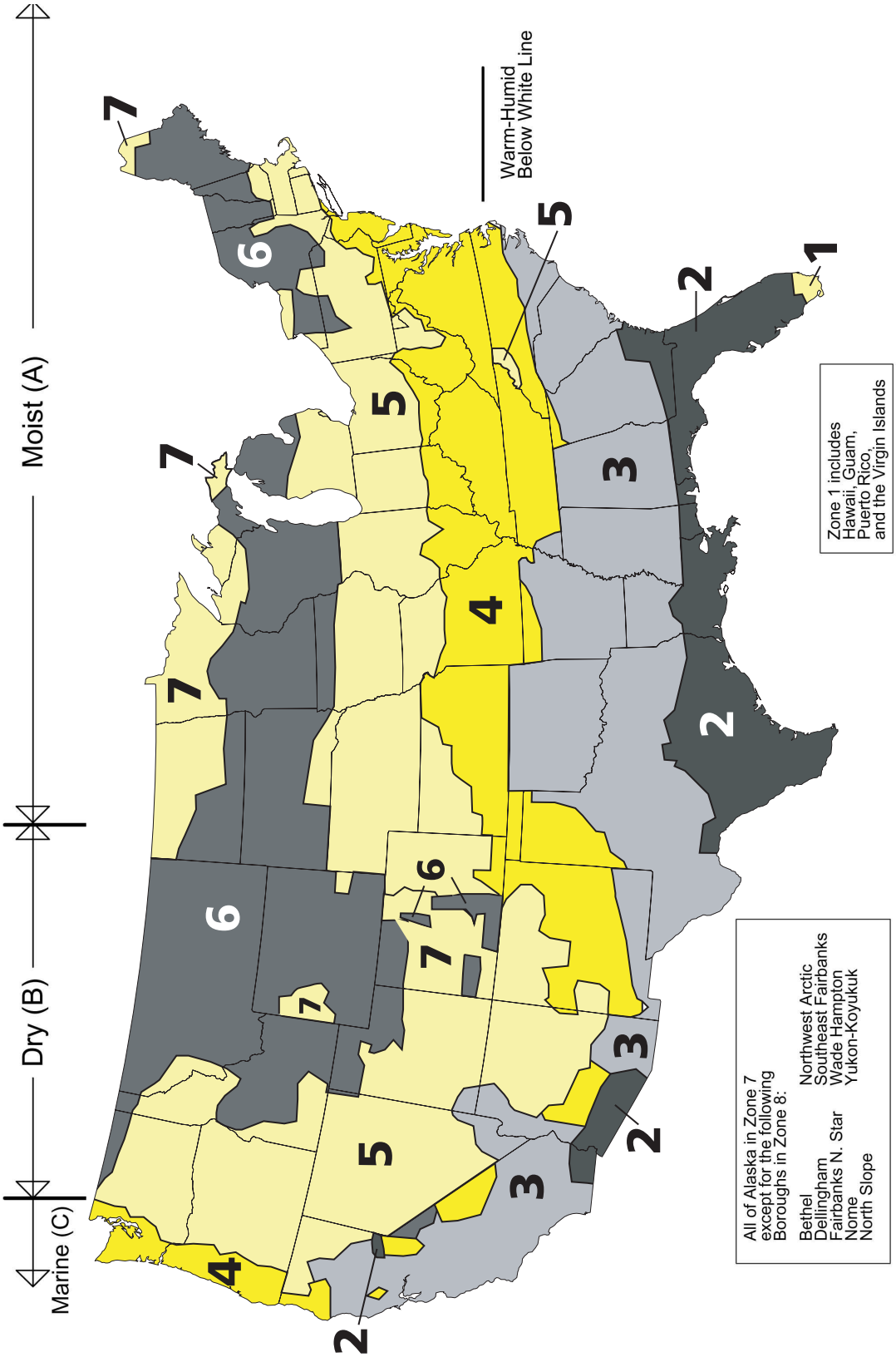

*For a more detailed county-by-county Climate Zone Map, go to www.eere.energy.gov/consumer/tips/insulation.html

Thermal performance standards as recommended in National Voluntary Consensus Standard ASHRAE/IES 90. Energy Efficient Design of New Buildings Except Low Rise Residential Buildings (American Society of Heating, Refrigerating and Air-Conditioning Engineers), are widely accepted by code jurisdictions across the country. For new commercial construction, ASHRAE/IES 90.1 provides minimum thermal resistance (R) requirements for ducts, plenums and enclosures. These requirements are based upon the geographical climate zone location of the project and physical location of the duct in the building.

ASHRAE/IES 90.1-2007 DUCT INSULATION TABLES

Minimum Duct Insulation R-Value, [a] Cooling and Heating Only Supply Ducts and Return Ducts

	Duct Location						
Climate Zone	Exterior	Ventilated Attic	Unvented Attic Above Insulated Ceiling	Unvented Attic with Roof Insulation[a]	Unconditioned Space[b]	Indirectly Conditioned Space[c]	Buried
				Heating-Only Ducts			
1, 2	none	none	none	none	none	none	none
3	R-3.5	none	none	none	none	none	none
4	R-3.5	none	none	none	none	none	none
5	R-6	R-3.5	none	none	none	none	R-3.5
6	R-6	R-6	R-3.5	none	none	none	R-3.5
7	R-8	R-6	R-6	none	R-3.5	none	R-3.5
8	R-8	R-8	R-6	none	R-6	none	R-6
				Cooling-Only Ducts			
1	R-6	R-6	R-8	R-3.5	R-3.5	none	R-3.5
2	R-6	R-6	R-6	R-3.5	R-3.5	none	R-3.5
3	R-6	R-6	R-6	R-3.5	R-1.9	none	none
4	R-3.5	R-3.5	R-6	R-1.9	R-1.9	none	none
5, 6	R-3.5	R-1.9	R-3.5	R-1.9	R-1.9	none	none
7, 8	R-1.9	R-1.9	R-1.9	R-1.9	R-1.9	none	none
				Return Ducts			
1 to 8	R-3.5	R-3.5	R-3.5	none	none	none	none

[a]Insulation R-values, measured in (h•ft²•˚F)/Btu, are for the insulation as installed and do not include film resistance. The required minimum thicknesses do not consider water vapor transmission and possible surface condensation. Where exterior walls are used as plenum walls, wall insulation shall be as required by the most restrictive condition of Section 6.4.4.2 or Section 5. Insulation resistance measured on a horizontal plane in accordance with ASTM C518 at a mean temperature of 75˚F at the installed thickness.
[b]Includes crawlspaces, both ventilated and nonventilated.
[c]Includes return air plenums with or without exposed roofs above.

ASHRAE/IES 90.1-2007 Minimum Duct Insulation R-Value, [a] Cooling and Heating Only Supply Ducts and Return Ducts

	Duct Location						
Climate Zone	Exterior	Ventillated Attic	Unvented Attic Above Insulated Ceiling	Unvented Attic with Roof Insulation[a]	Unconditioned Space[b]	Indirectly Conditioned Space[c]	Buried
				Supply Ducts			
1	R-6	R-6	R-8	R-3.5	R-3.5	none	R-3.5
2	R-6	R-6	R-6	R-3.5	R-3.5	none	R-3.5
3	R-6	R-6	R-6	R-3.5	R-3.5	none	R-3.5
4	R-6	R-6	R-6	R-3.5	R-3.5	none	R-3.5
5	R-6	R-6	R-6	R-1.9	R-3.5	none	R-3.5
6	R-8	R-6	R-6	R-1.9	R-3.5	none	R-3.5
7	R-8	R-6	R-6	R-1.9	R-3.5	none	R-3.5
8	R-8	R-8	R-8	R-1.9	R-6	none	R-6
				Return Ducts			
1 to 8	R-3.5	R-3.5	R-3.5	none	none	none	none

[a]Insulation R-values, measured in (h•ft²•˚F)/Btu, are for the insulation as installed and do not include film resistance. The required minimum thicknesses do not consider water vapor transmission and possible surface condensation. Where exterior walls are used as plenum walls, wall insulation shall be as required by the most restrictive condition of Section 6.4.4.2 or Section 5. Insulation resistance measured on a horizontal plane in accordance with ASTM C518 at a mean temperature of 75˚F at the installed thickness.
[b]Includes crawlspaces, both ventilated and nonventilated.
[c]Includes return air plenums with or without exposed roofs above.

Residential Duct Insulation Requirements

ASHRAE Standard 90.2 – 2007 *Energy Efficient Design of New Low Rise Residential Buildings*
The ASHRAE 90.2 standard requires all portions of the air distribution system installed in or on buildings for heating and cooling shall be insulated with a minimum of R-8. Insulation is not required when the ducts are within the conditioned space.

International Energy Conservation Code (IECC) 2006 and 2009
The 2006 and 2009 IECC require all return and supply ducts shall be insulated to a minimum of R-8. Ducts in floor trusses shall be insulated to a minimum of R-6. Ducts or portions thereof located completely inside the building thermal envelope do not require insulation.

International Residential Code (IRC) 2006 and 2009
All return and supply ducts shall be insulated to a minimum of R-8. Ducts in floor trusses shall be insulated to a minimum of R-6. Ducts or portions thereof located completely inside the building thermal envelope do not require insulation.

FACTS ON FIBROUS GLASS DUCT INSULATION

Fiber glass has been commercially manufactured for more than 75 years. Today, fiber glass is an important component of the nation's economy, providing energy-conserving products that help reduce pollution and preserve the environment.

One of the world's most useful materials, fiber glass can absorb sound, help control heat flow, diminish impurities from liquids and gases, reinforce other materials and, with a vapor retarder, help control condensation. Fiber glass duct insulation will not support the growth of mold when tested in accordance with specifications of the American Society for Testing and Materials (ASTM C 1338) or Underwriters Laboratories Inc. UL 181. In addition, fiber glass duct insulation materials installed internal to the duct system are tested per ASTM G 21 and G 22 for mold and bacteria.

Commitment to Product Stewardship

The NAIMA Product Stewardship Program was established as a stewardship program for worker protection. This Product Stewardship Program is a renewal of the earlier OSHA-NAIMA Health and Safety Partnership Program ("HSPP"). The HSPP was a comprehensive eight-year partnership with OSHA, which NAIMA completed in May 2007. NAIMA's pamphlet, "Working Smart with Fiber Glass, Rock Wool and Slag wool Products," provides current and specific safe work practices which are part of NAIMA's Product Stewardship Program and reflects the input of international industry, trade associations, OSHA, Labor, and others. Virtually all of these work practices were part of the HSPP, and were endorsed by OSHA. NAIMA has also developed an instructional video/DVD entitled "Play It Smart, Play It Safe," which details safe work practices and the following four components:

1. A voluntary workplace permissible exposure limit (PEL) of 1 respirable fiber/cc.
2. Respiratory protection for workers when workplace exposures exceed this PEL and for certain designated tasks.
3. Monitoring of workplace airborne fiber levels and a centralized exposure monitoring database.
4. Information and training for workers who handle glass wool products.

This tape and the above-mentioned pamphlet can be ordered in either English or Spanish from the NAIMA library at www.naima.org.

Health and Safety

NAIMA and its member companies are committed to ensuring that fiber glass products can be safely manufactured, installed and used. NAIMA member companies have funded tens of millions of dollars of research at leading independent laboratories and universities in the United States and abroad. The weight of the scientific research shows no association between exposure to glass fibers and respiratory disease or cancer in humans.

In October 2001, an international expert review by the International Agency for Research on Cancer (IARC) re-evaluated the 1988 IARC assessment of glass fibers and removed glass wools from its list of possible carcinogens by downgrading the classification of these fibers from Group 2B (possible carcinogen) to Group 3 (not classifiable as to carcinogenicity in humans). All fiber glass wools that are commonly used for thermal and acoustical insulation are included in this classification. IARC noted specifically:

"Epidemiologic studies published during the 15 years since the previous IARC Monographs review of these fibers in 1988 provide no evidence of increased risks of lung cancer or mesothelioma (cancer of the lining of the body cavities) from occupational exposures during manufacture of these materials, and inadequate evidence overall of any cancer risk."

IARC retained its Group 3 classification for continuous glass filaments and the Group 2B "possible carcinogen" classification for certain special purpose glass fibers.

The IARC downgrade is consistent with the conclusion reached by the U.S. National Academy of Sciences, which in 2000 found "no significant association between fiber exposure and lung cancer or nonmalignant respiratory disease in the MVF [man-made vitreous fiber] manufacturing environment."

IARC's comprehensive review of the extensive studies developed over the past 15 years indicates that some of the prior reviews now need to be updated. Many of these earlier reviews do not account for the new science. For example, the U. S. Department of Health and Human Service (HHS, Shalala 1994) included fiber

glass on its list of potential carcinogens based primarily on the 1988 IARC classification. Similarly, the California listing of fiber glass as "known to the state to cause cancer" was based principally on the old IARC classification.

Fiber glass is now the most thoroughly evaluated insulation material in the market. The data from these evaluations demonstrate that:

(1) No causal association has been found between either cancer or non-malignant pulmonary disease and human exposure to glass fibers.

(2) Inhalation exposures of animals to massive amounts of biosoluble glass wool fibers, hundreds and even thousands of times greater than human exposures, have not shown a relationship between glass wool fibers and disease.

(3) Glass wool fibers are biosoluble and therefore dissolve more rapidly in body fluids than other fibers that have been associated with human disease.

(4) Workplace levels of respirable glass fibers in most settings are less than 1 fiber/cc; and airborne levels in insulated buildings are not significantly different than levels outside or in uninsulated buildings.

NAIMA member companies continue to support ongoing scientific investigations into the health and safety aspects of glass wools as part of their comprehensive product stewardship program. NAIMA is dedicated to providing up-to-date information on the results of these studies as they become available.

Safety of In-Place Duct Products

When properly designed and installed, fiber glass products for air handling systems improve the indoor environment by controlling heat loss or gain, while reducing condensation and providing acoustical insulation.

The results of several more recent scientific studies demonstrate that fiber glass insulated HVAC systems have no adverse effects on indoor environmental quality.

• The IPCS Environmental Health Criteria 77 on man–made mineral fibers has concluded: " … it has generally been concluded that the contribution of fibrous glass lined air transmission systems to the fibre content of indoor air is insignificant."

• Duke University – A 1997 study showed that mold is no more likely to grow on fiber glass than on any other surface in the duct system. Mold grows in the presence of water. By helping to reduce condensation, fiber glass insulated ducts actually help minimize microbial growth.

• University of Nevada Las Vegas – A 1996 study confirmed the results of numerous earlier studies showing that fiber content in the indoor air from fiber glass lined systems is insignificant and does not adversely affect the health of building occupants.

Conclusion

NAIMA members believe fiber glass is safe to manufacture, install and use when recommended work practices are followed. Complete details on work practices and exposure guidelines are contained in NAIMA's Product Stewardship Program and can be obtained in written or video form by contacting NAIMA at the following address:

NAIMA
North American Insulation Manufacturers Association
44 Canal Center Plaza, Suite 310
Alexandria, VA 22314

Phone: (703) 684-0084 Fax: (703) 684-0427
Or visit us on the Internet at www.naima.org.

About NAIMA

NAIMA is the association for North American manufacturers of fiber glass, rock wool, and slag wool insulation products. Its role is to promote energy efficiency and environmental preservation through the use of fiber glass, rock wool, and slag wool insulation, and to encourage the safe production and use of these materials.

NAIMA, continuing its members' commitment to safety, has established a renewed Product Stewardship Program, which embodies the components of the earlier OSHA-NAIMA Health and Safety Partnership Program (HSPP). The HSPP was a comprehensive eight-year partnership with OSHA, which NAMA completed in May 2007, and now NAIMA incorporates these safe work practicse into NAIMA's Product Stewardship Program.

For more information, contact:

NAIMA
North American Insulation Manufacturers Association
44 Canal Center Plaza, Suite 310
Alexandria, VA 22314
Tel: 703-684-0084
Fax: 703-684-0427
E-mail: insulation@naima.org
Website: http://www.naima.org

Pub. # AH116 07/10